DRX_ANT_GND

TUNER_CTR

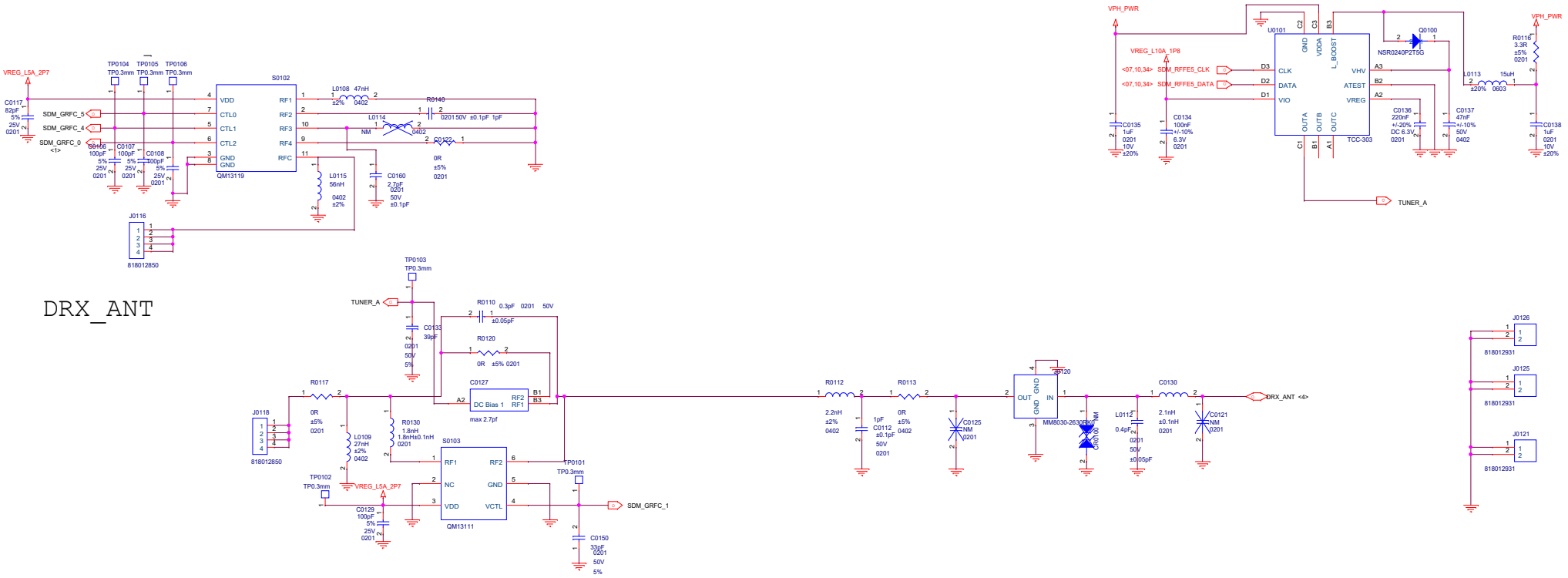

DRX_ANT

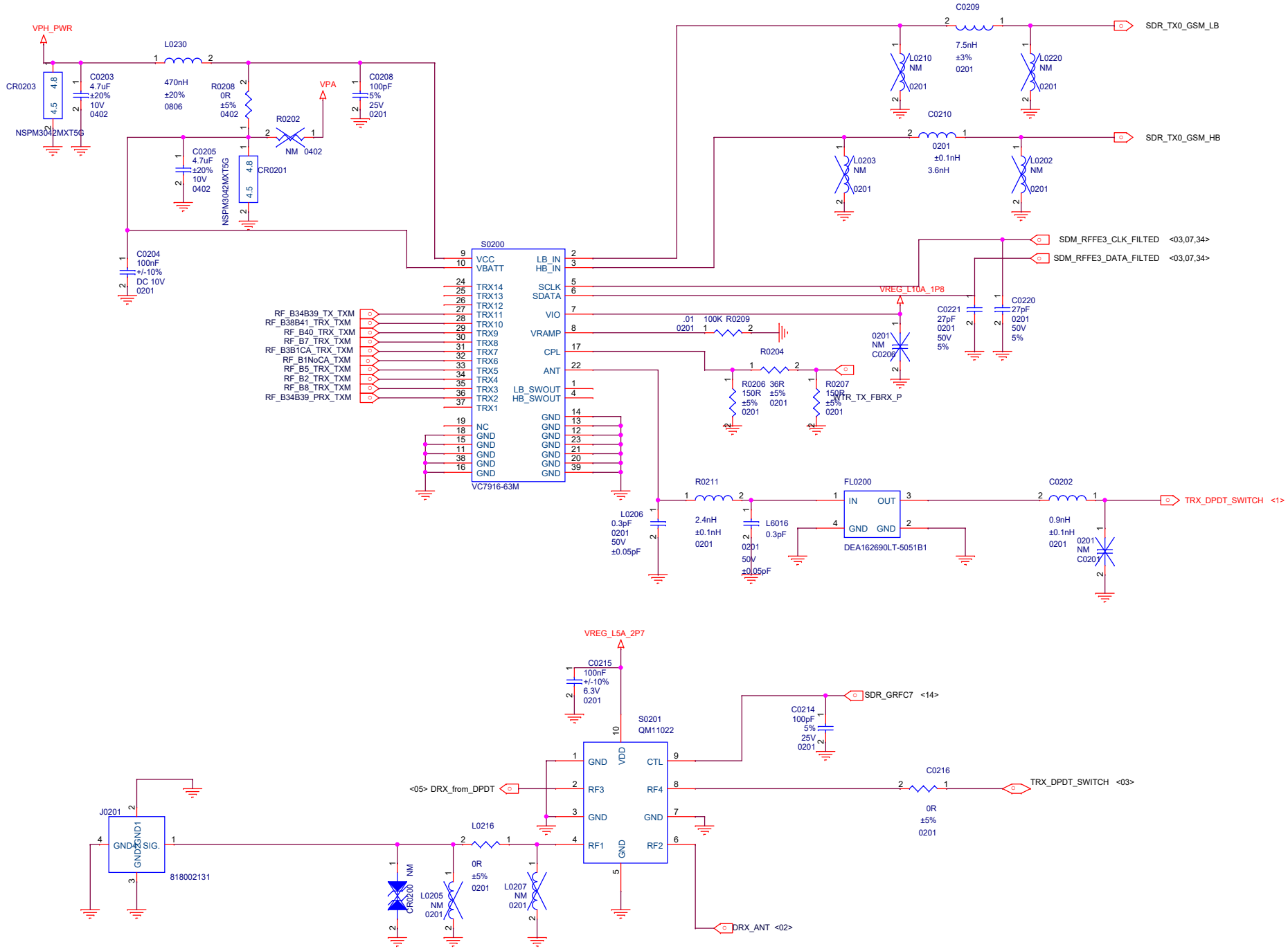
VPH_PWR
CR0203
4.8
4.5
NSPM3042MXT5G
C0203
4.7uF
±20%
10V
0402
L0230
470nH
±20%
0806
R0208
0R
±5%
0402
VPA
R0202
NM 0402
C0208
100pF
5%
25V
0201
C0205
4.7uF
±20%
10V
0402
CR0201
NSPM3042MXT5G
C0204
100nF
+/-10%
DC 10V
0201
S0200
VC7916-63M
VCC
VBATT
TRX14
TRX13
TRX12
TRX11
TRX10
TRX9
TRX8
TRX7
TRX6
TRX5
TRX4
TRX3
TRX2
TRX1
NC
GND
LB_IN
HB_IN
SCLK
SDATA
VIO
VRAMP
CPL
ANT
LB_SWOUT
HB_SWOUT
RF_B34B39_TX_TXM
RF_B38B41_TRX_TXM
RF_B40_TRX_TXM
RF_B7_TRX_TXM
RF_B3B1CA_TRX_TXM
RF_B1NoCA_TXM
RF_B5_TRX_TXM
RF_B2_TRX_TXM
RF_B8_TRX_TXM
RF_B34B39_PRX_TXM
C0209
7.5nH
±3%
0201
L0210
NM
0201
L0220
NM
0201
SDR_TX0_GSM_LB
C0210
0201
±0.1nH
3.6nH
L0203
NM
0201
L0202
NM
0201
SDR_TX0_GSM_HB
SDM_RFFE3_CLK_FILTED <03,07,34>
SDM_RFFE3_DATA_FILTED <03,07,34>
VREG_LT0A_1P8
C0221
27pF
0201
50V
5%
C0220
27pF
0201
50V
5%
.01
0201
100K R0209
R0204
0201
NM
C0206
R0206
150R
±5%
0201
36R
±5%
0201
R0207
150R
±5%
0201
WTR_TX_FBRX_P
R0211
2.4nH
±0.1nH
0201
L0206
0.3pF
0201
50V
±0.05pF
L6016
0.3pF
0201
50V
±0.05pF
FL0200
IN
OUT
GND
GND
DEA162690LT-5051B1
C0202
0.9nH
±0.1nH
0201
0201
NM
C0207
TRX_DPDT_SWITCH <1>
VREG_L5A_2P7
C0215
100nF
+/-10%
6.3V
0201
S0201
QM11022
VDD
GND
RF3
GND
RF1
GND
CTL
RF4
GND
RF2
SDR_GRFC7 <14>
C0214
100pF
5%
25V
0201
<05> DRX_from_DPDT
C0216
0R
±5%
0201
TRX_DPDT_SWITCH <03>
J0201
GND1
GND2
SIG.
818002131
L0216
0R
±5%
0201
CR0200
NM
L0205
NM
0201
L0207
NM
0201
DRX_ANT <02>

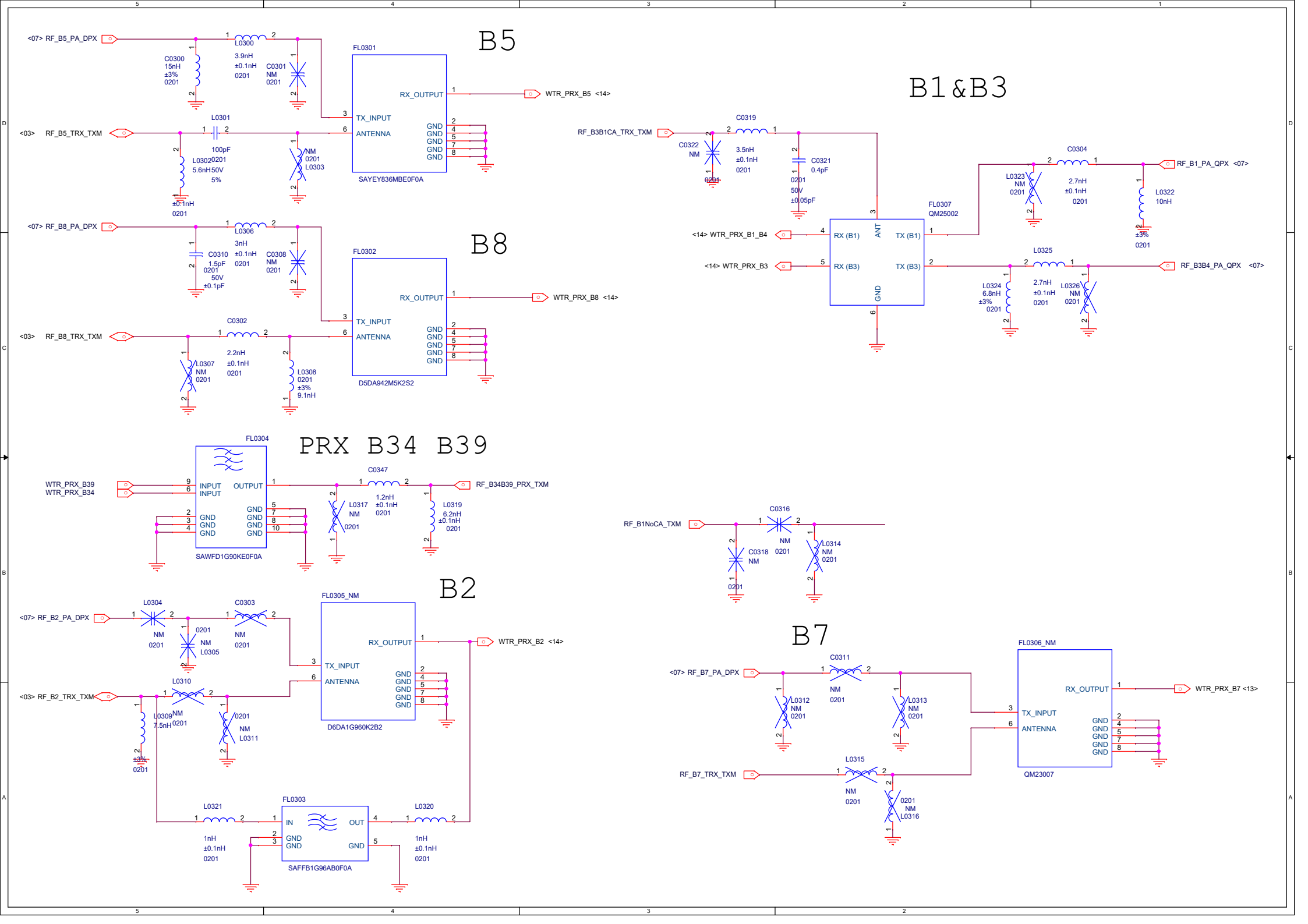
B5
<07> RF_B5_PA_DPX
L0300
3.9nH
±0.1nH
0201
C0300
15nH
±3%
0201
C0301
NM
0201
FL0301
RX_OUTPUT
TX_INPUT
ANTENNA
GND
WTR_PRX_B5 <14>
<03> RF_B5_TRX_TXM
L0301
100pF
0201
50V
5%
L0302
5.6nH
±0.1nH
0201
NM
0201
L0303
SAYEY836MBE0F0A
B8
<07> RF_B8_PA_DPX
L0306
3nH
±0.1nH
0201
C0310
1.5pF
0201
50V
±0.1pF
C0308
NM
0201
FL0302
RX_OUTPUT
TX_INPUT
ANTENNA
GND
WTR_PRX_B8 <14>
<03> RF_B8_TRX_TXM
C0302
2.2nH
±0.1nH
0201
L0307
NM
0201
L0308
0201
±3%
9.1nH
D5DA942M5K2S2
B1&B3
RF_B3B1CA_TRX_TXM
C0319
3.5nH
±0.1nH
0201
C0322
NM
0201
C0321
0.4pF
0201
50V
±0.05pF
FL0307
QM25002
ANT
RX (B1)
TX (B1)
RX (B3)
TX (B3)
GND
<14> WTR_PRX_B1_B4
<14> WTR_PRX_B3
C0304
2.7nH
±0.1nH
0201
L0323
NM
0201
L0322
10nH
±5%
0201
RF_B1_PA_QPX <07>
L0325
2.7nH
±0.1nH
0201
L0324
6.8nH
±3%
0201
L0326
NM
0201
RF_B3B4_PA_QPX <07>
PRX B34 B39
FL0304
WTR_PRX_B39
WTR_PRX_B34
INPUT
OUTPUT
GND
SAWFD1G90KE0F0A
C0347
1.2nH
±0.1nH
0201
L0317
NM
0201
L0319
6.2nH
±0.1nH
0201
RF_B34B39_PRX_TXM
RF_B1NoCA_TXM
C0316
NM
0201
C0318
NM
0201
L0314
NM
0201
B2
<07> RF_B2_PA_DPX
L0304
NM
0201
C0303
NM
0201
0201
NM
L0305
FL0305_NM
RX_OUTPUT
TX_INPUT
ANTENNA
GND
WTR_PRX_B2 <14>
<03> RF_B2_TRX_TXM
L0310
NM
0201
L0309
7.5nH
±3%
0201
0201
NM
L0311
D6DA1G960K2B2
L0321
1nH
±0.1nH
0201
FL0303
IN
OUT
GND
SAFFB1G96AB0F0A
L0320
1nH
±0.1nH
0201
B7
<07> RF_B7_PA_DPX
C0311
NM
0201
L0312
NM
0201
L0313
NM
0201
FL0306_NM
RX_OUTPUT
TX_INPUT
ANTENNA
GND
WTR_PRX_B7 <13>
QM23007
RF_B7_TRX_TXM
L0315
NM
0201
0201
NM
L0316

DRX

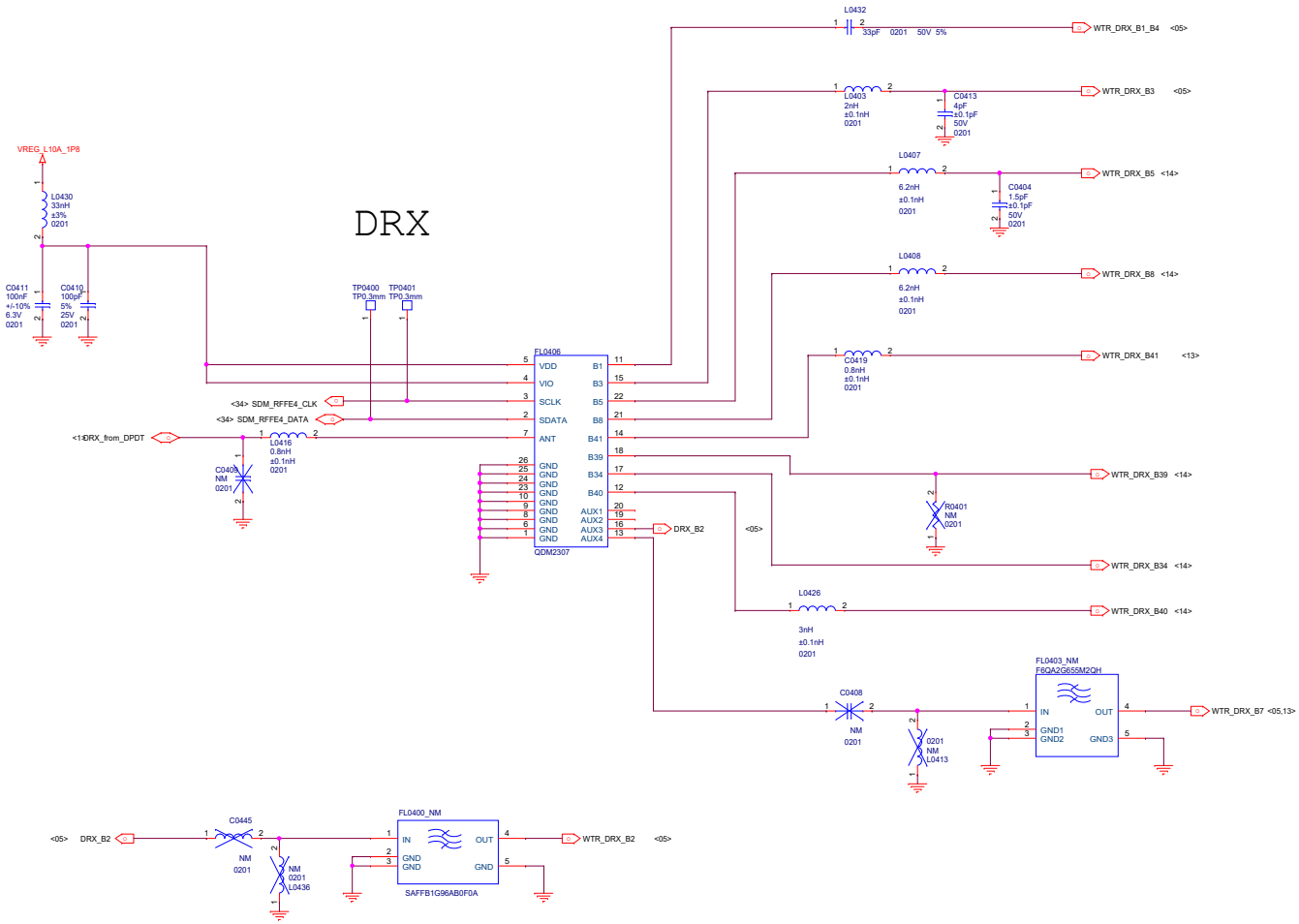
VREG_L10A_1P8
L0430
33nH
±3%
0201
C0411
100nF
+/-10%
6.3V
0201
C0410
100pF
5%
25V
0201
TP0400
TP0_3mm
TP0401
TP0_3mm
FL0406
VDD
VIO
SCLK
SDATA
ANT
GND
B1
B3
B5
B8
B41
B39
B34
B40
AUX1
AUX2
AUX3
AUX4
QDM2307
<34> SDM_RFFE4_CLK
<34> SDM_RFFE4_DATA
<1:DRX_from_DPDT
L0416
0.8nH
±0.1nH
0201
C0409
NM
0201
DRX_B2
<05>
L0432
33pF 0201 50V 5%
WTR_DRX_B1_B4 <05>
L0403
2nH
±0.1nH
0201
C0413
4pF
±0.1pF
50V
0201
WTR_DRX_B3 <05>
L0407
6.2nH
±0.1nH
0201
C0404
1.5pF
±0.1pF
50V
0201
WTR_DRX_B5 <14>
L0408
6.2nH
±0.1nH
0201
WTR_DRX_B8 <14>
C0419
0.8nH
±0.1nH
0201
WTR_DRX_B41 <13>
R0401
NM
0201
WTR_DRX_B39 <14>
WTR_DRX_B34 <14>
L0426
3nH
±0.1nH
0201
WTR_DRX_B40 <14>
C0408
NM
0201
0201
NM
L0413
FL0403_NM
F6QA2G655M2QH
IN
OUT
GND1
GND2
GND3
WTR_DRX_B7 <05,13>
<05> DRX_B2
C0445
NM
0201
NM
0201
L0436
FL0400_NM
IN
OUT
GND
GND
GND
SAFFB1G96AB0F0A
WTR_DRX_B2 <05>

MMMB PA

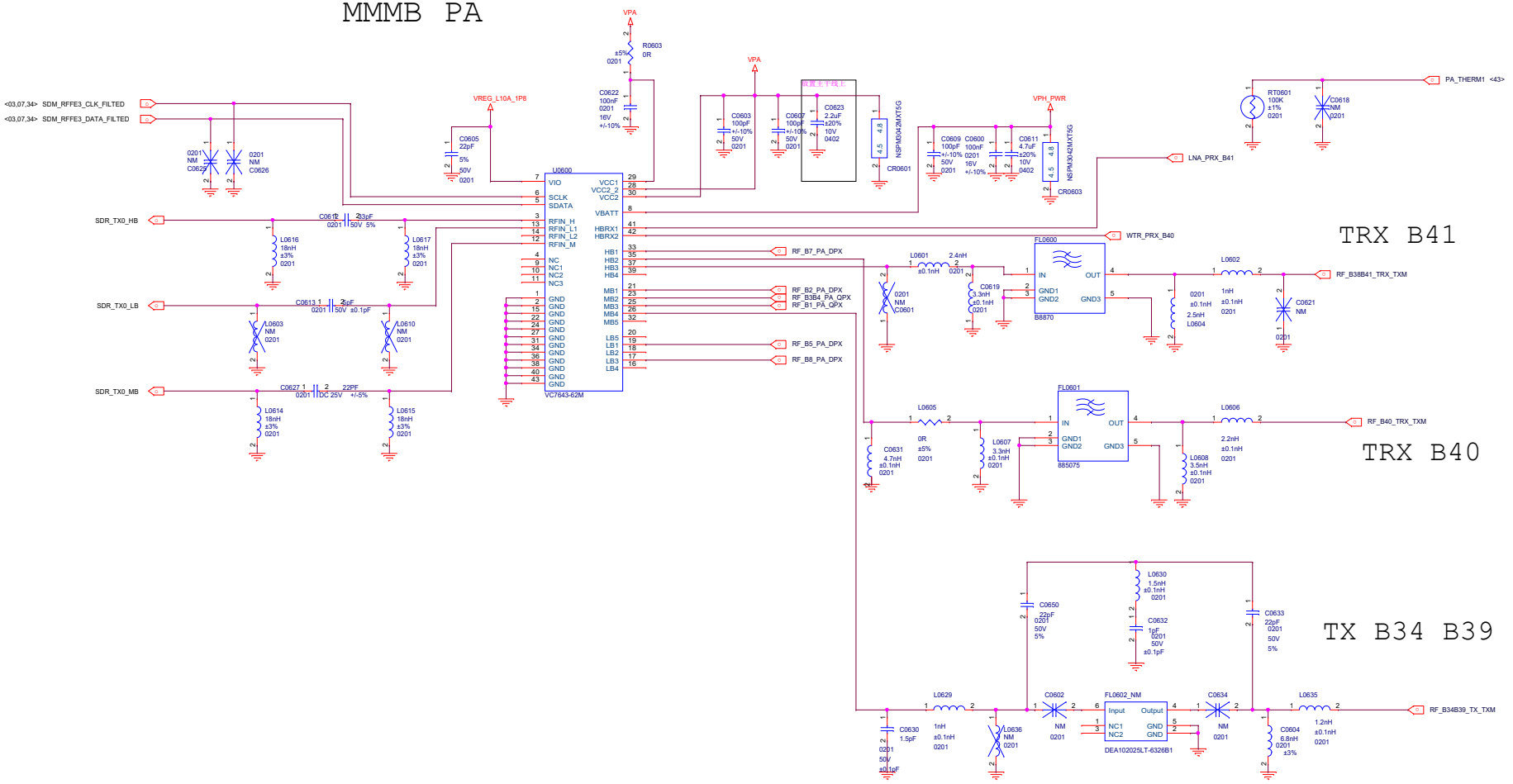
TRX B41
TRX B40
TX B34 B39
U0600
VC7643-62M
FL0600
B8870
FL0601
885075
FL0602_NM
DEA102025LT-6326B1
VPA
VPH_PWR
VREG_L10A_1P8
<03,07,34> SDM_RFFE3_CLK_FILTED
<03,07,34> SDM_RFFE3_DATA_FILTED
SDR_TX0_HB
SDR_TX0_LB
SDR_TX0_MB
PA_THERM1 <43>
LNA_PRX_B41
WTR_PRX_B40
RF_B7_PA_DPX
RF_B2_PA_DPX
RF_B3B4_PA_QPX
RF_B1_PA_QPX
RF_B5_PA_DPX
RF_B8_PA_DPX
RF_B38B41_TRX_TXM
RF_B40_TRX_TXM
RF_B34B39_TX_TXM

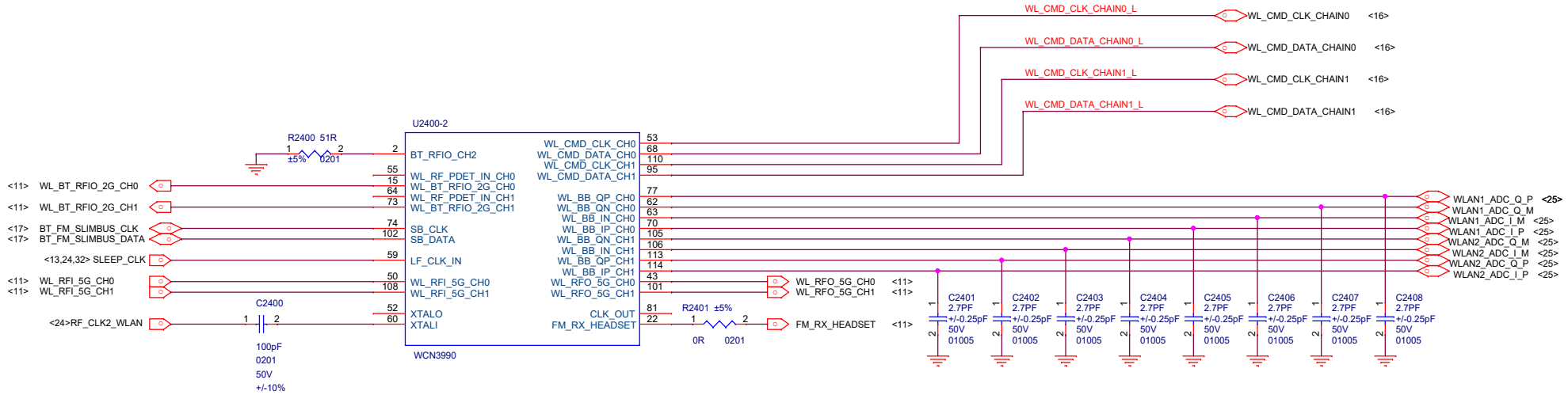
U2400-2
WCN3990
R2400 51R ±5% 0201
C2400 100pF 0201 50V +/-10%
R2401 ±5% 0R 0201
C2401 2.7PF +/-0.25pF 50V 01005
C2402 2.7PF +/-0.25pF 50V 01005
C2403 2.7PF +/-0.25pF 50V 01005
C2404 2.7PF +/-0.25pF 50V 01005
C2405 2.7PF +/-0.25pF 50V 01005
C2406 2.7PF +/-0.25pF 50V 01005
C2407 2.7PF +/-0.25pF 50V 01005
C2408 2.7PF +/-0.25pF 50V 01005
WL_CMD_CLK_CHAIN0_L
WL_CMD_DATA_CHAIN0_L
WL_CMD_CLK_CHAIN1_L
WL_CMD_DATA_CHAIN1_L
WL_CMD_CLK_CHAIN0 <16>
WL_CMD_DATA_CHAIN0 <16>
WL_CMD_CLK_CHAIN1 <16>
WL_CMD_DATA_CHAIN1 <16>
<11> WL_BT_RFIO_2G_CH0
<11> WL_BT_RFIO_2G_CH1
<17> BT_FM_SLIMBUS_CLK
<17> BT_FM_SLIMBUS_DATA
<13,24,32> SLEEP_CLK
<11> WL_RFI_5G_CH0
<11> WL_RFI_5G_CH1
<24>RF_CLK2_WLAN
BT_RFIO_CH2
WL_RF_PDET_IN_CH0
WL_BT_RFIO_2G_CH0
WL_RF_PDET_IN_CH1
WL_BT_RFIO_2G_CH1
SB_CLK
SB_DATA
LF_CLK_IN
WL_RFI_5G_CH0
WL_RFI_5G_CH1
XTALO
XTALI
WL_CMD_CLK_CH0
WL_CMD_DATA_CH0
WL_CMD_CLK_CH1
WL_CMD_DATA_CH1
WL_BB_QP_CH0
WL_BB_QN_CH0
WL_BB_IN_CH0
WL_BB_IP_CH0
WL_BB_QN_CH1
WL_BB_IN_CH1
WL_BB_QP_CH1
WL_BB_IP_CH1
WL_RFO_5G_CH0
WL_RFO_5G_CH1
CLK_OUT
FM_RX_HEADSET
WL_RFO_5G_CH0 <11>
WL_RFO_5G_CH1 <11>
FM_RX_HEADSET <11>
WLAN1_ADC_Q_P <25>
WLAN1_ADC_Q_M
WLAN1_ADC_I_M <25>
WLAN1_ADC_I_P <25>
WLAN2_ADC_Q_M <25>
WLAN2_ADC_I_M <25>
WLAN2_ADC_Q_P <25>
WLAN2_ADC_I_P <25>

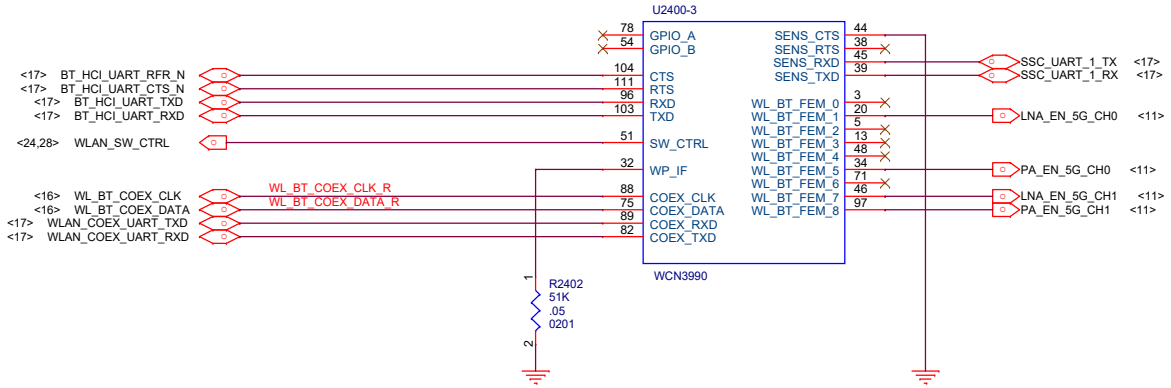
U2400-3
WCN3990
R2402 51K .05 0201
<17> BT_HCI_UART_RFR_N
<17> BT_HCI_UART_CTS_N
<17> BT_HCI_UART_TXD
<17> BT_HCI_UART_RXD
<24,28> WLAN_SW_CTRL
<16> WL_BT_COEX_CLK
<16> WL_BT_COEX_DATA
<17> WLAN_COEX_UART_TXD
<17> WLAN_COEX_UART_RXD
WL_BT_COEX_CLK_R
WL_BT_COEX_DATA_R
GPIO_A
GPIO_B
CTS
RTS
RXD
TXD
SW_CTRL
WP_IF
COEX_CLK
COEX_DATA
COEX_RXD
COEX_TXD
SENS_CTS
SENS_RTS
SENS_RXD
SENS_TXD
WL_BT_FEM_0
WL_BT_FEM_1
WL_BT_FEM_2
WL_BT_FEM_3
WL_BT_FEM_4
WL_BT_FEM_5
WL_BT_FEM_6
WL_BT_FEM_7
WL_BT_FEM_8
SSC_UART_1_TX <17>
SSC_UART_1_RX <17>
LNA_EN_5G_CH0 <11>
PA_EN_5G_CH0 <11>
LNA_EN_5G_CH1 <11>
PA_EN_5G_CH1 <11>

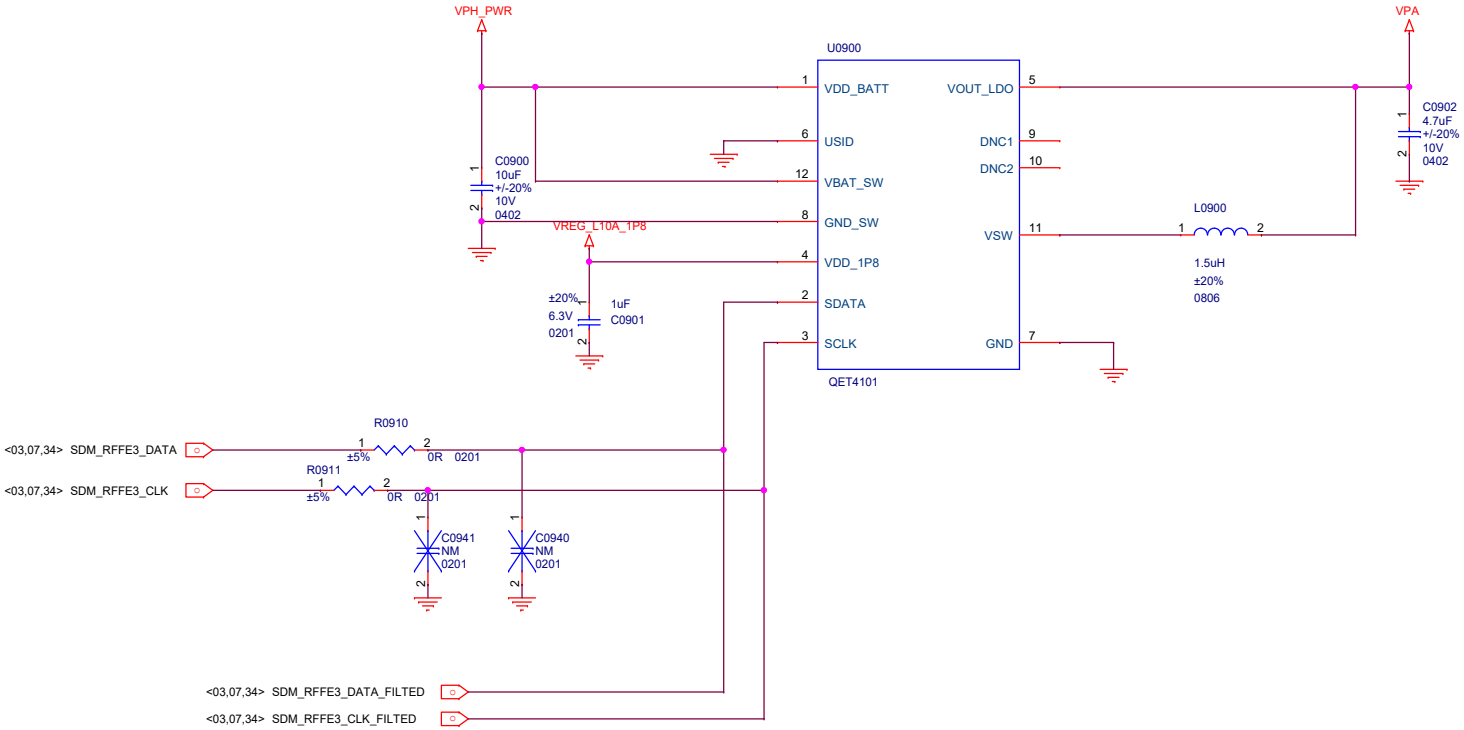
VPH_PWR
VPA
U0900
VDD_BATT
VOUT_LDO
USID
DNC1
DNC2
VBAT_SW
GND_SW
VSW
VDD_1P8
SDATA
SCLK
GND
QET4101
C0900
10uF
+/-20%
10V
0402
C0902
4.7uF
+/-20%
10V
0402
L0900
1.5uH
±20%
0806
VREG_L10A_1P8
±20%
6.3V
0201
1uF
C0901
R0910
±5%
0R 0201
R0911
±5%
0R 0201
C0941
NM
0201
C0940
NM
0201
<03,07,34> SDM_RFFE3_DATA
<03,07,34> SDM_RFFE3_CLK
<03,07,34> SDM_RFFE3_DATA_FILTED
<03,07,34> SDM_RFFE3_CLK_FILTED

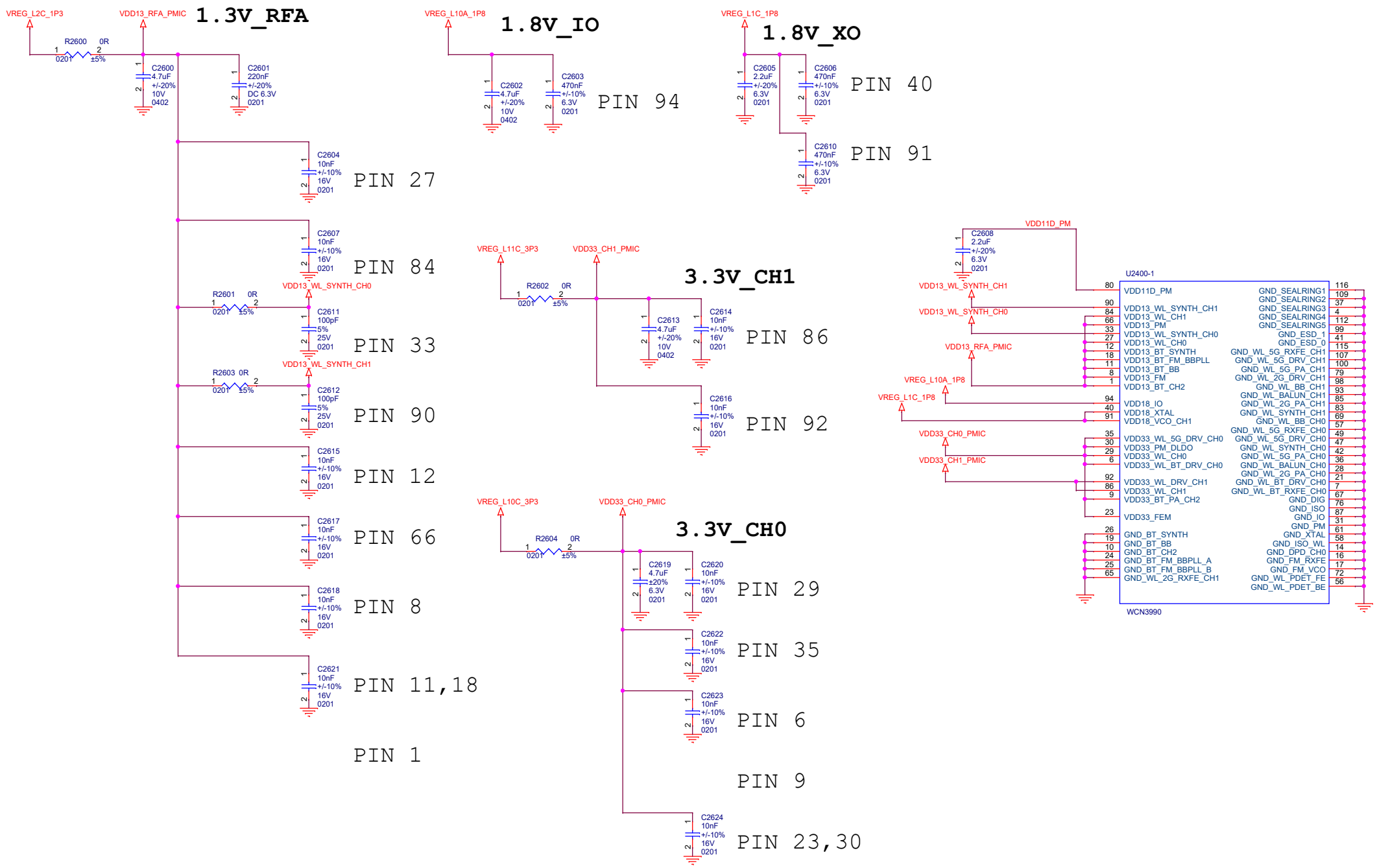
1.3V_RFA
VREG_L2C_1P3
VDD13_RFA_PMIC
R2600 0R 0201 ±5%
C2600 4.7uF +/-20% 10V 0402
C2601 220nF +/-20% DC 6.3V 0201
C2604 10nF +/-10% 16V 0201
PIN 27
C2607 10nF +/-10% 16V 0201
PIN 84
VDD13_WL_SYNTH_CH0
R2601 0R 0201 ±5%
C2611 100pF 5% 25V 0201
PIN 33
VDD13_WL_SYNTH_CH1
R2603 0R 0201 ±5%
C2612 100pF 5% 25V 0201
PIN 90
C2615 10nF +/-10% 16V 0201
PIN 12
C2617 10nF +/-10% 16V 0201
PIN 66
C2618 10nF +/-10% 16V 0201
PIN 8
C2621 10nF +/-10% 16V 0201
PIN 11,18
PIN 1
1.8V_IO
VREG_L10A_1P8
C2602 4.7uF +/-20% 10V 0402
C2603 470nF +/-10% 6.3V 0201
PIN 94
1.8V_XO
VREG_L1C_1P8
C2605 2.2uF +/-20% 6.3V 0201
C2606 470nF +/-10% 6.3V 0201
PIN 40
C2610 470nF +/-10% 6.3V 0201
PIN 91
3.3V_CH1
VREG_L11C_3P3
VDD33_CH1_PMIC
R2602 0R 0201 ±5%
C2613 4.7uF +/-20% 10V 0402
C2614 10nF +/-10% 16V 0201
PIN 86
C2616 10nF +/-10% 16V 0201
PIN 92
3.3V_CH0
VREG_L10C_3P3
VDD33_CH0_PMIC
R2604 0R 0201 ±5%
C2619 4.7uF ±20% 6.3V 0201
C2620 10nF +/-10% 16V 0201
PIN 29
C2622 10nF +/-10% 16V 0201
PIN 35
C2623 10nF +/-10% 16V 0201
PIN 6
PIN 9
C2624 10nF +/-10% 16V 0201
PIN 23,30
VDD11D_PM
C2608 2.2uF +/-20% 6.3V 0201
U2400-1
VDD11D_PM
VDD13_WL_SYNTH_CH1
VDD13_WL_SYNTH_CH0
VDD13_RFA_PMIC
VREG_L10A_1P8
VREG_L1C_1P8
VDD33_CH0_PMIC
VDD33_CH1_PMIC
VDD13_WL_SYNTH_CH1
VDD13_WL_CH1
VDD13_PM
VDD13_WL_SYNTH_CH0
VDD13_WL_CH0
VDD13_BT_SYNTH
VDD13_BT_FM_BBPLL
VDD13_BT_BB
VDD13_FM
VDD13_BT_CH2
VDD18_IO
VDD18_XTAL
VDD18_VCO_CH1
VDD33_WL_5G_DRV_CH0
VDD33_PM_DLDO
VDD33_WL_CH0
VDD33_WL_BT_DRV_CH0
VDD33_WL_DRV_CH1
VDD33_WL_CH1
VDD33_BT_PA_CH2
VDD33_FEM
GND_BT_SYNTH
GND_BT_BB
GND_BT_CH2
GND_BT_FM_BBPLL_A
GND_BT_FM_BBPLL_B
GND_WL_2G_RXFE_CH1
GND_SEALRING1
GND_SEALRING2
GND_SEALRING3
GND_SEALRING4
GND_SEALRING5
GND_ESD_1
GND_ESD_0
GND_WL_5G_RXFE_CH1
GND_WL_5G_DRV_CH1
GND_WL_5G_PA_CH1
GND_WL_2G_DRV_CH1
GND_WL_BB_CH1
GND_WL_BALUN_CH1
GND_WL_2G_PA_CH1
GND_WL_SYNTH_CH1
GND_WL_BB_CH0
GND_WL_5G_RXFE_CH0
GND_WL_5G_DRV_CH0
GND_WL_SYNTH_CH0
GND_WL_5G_PA_CH0
GND_WL_BALUN_CH0
GND_WL_2G_PA_CH0
GND_WL_BT_DRV_CH0
GND_WL_BT_RXFE_CH0
GND_DIG
GND_ISO
GND_IO
GND_PM
GND_XTAL
GND_ISO_WL
GND_DPD_CH0
GND_FM_RXFE
GND_FM_VCO
GND_WL_PDET_FE
GND_WL_PDET_BE
WCN3990

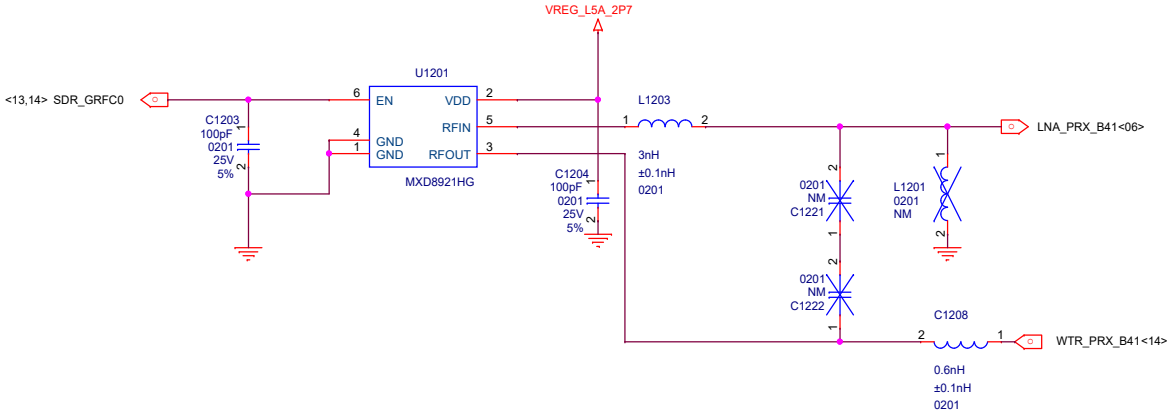
VREG_L5A_2P7
U1201
<13,14> SDR_GRFC0
EN
VDD
RFIN
GND
GND
RFOUT
MXD8921HG
C1203
100pF
0201
25V
5%
C1204
100pF
0201
25V
5%
L1203
3nH
±0.1nH
0201
LNA_PRX_B41<06>
0201
NM
C1221
0201
NM
C1222
L1201
0201
NM
C1208
0.6nH
±0.1nH
0201
WTR_PRX_B41<14>

TP1215
TP1216
TP1217
TP0.3mm
TP0.3mm
TP0.3mm
SDR_GRFC0 <03>
SDR_GRFC1 <13>
SDR_GRFC2 <13>

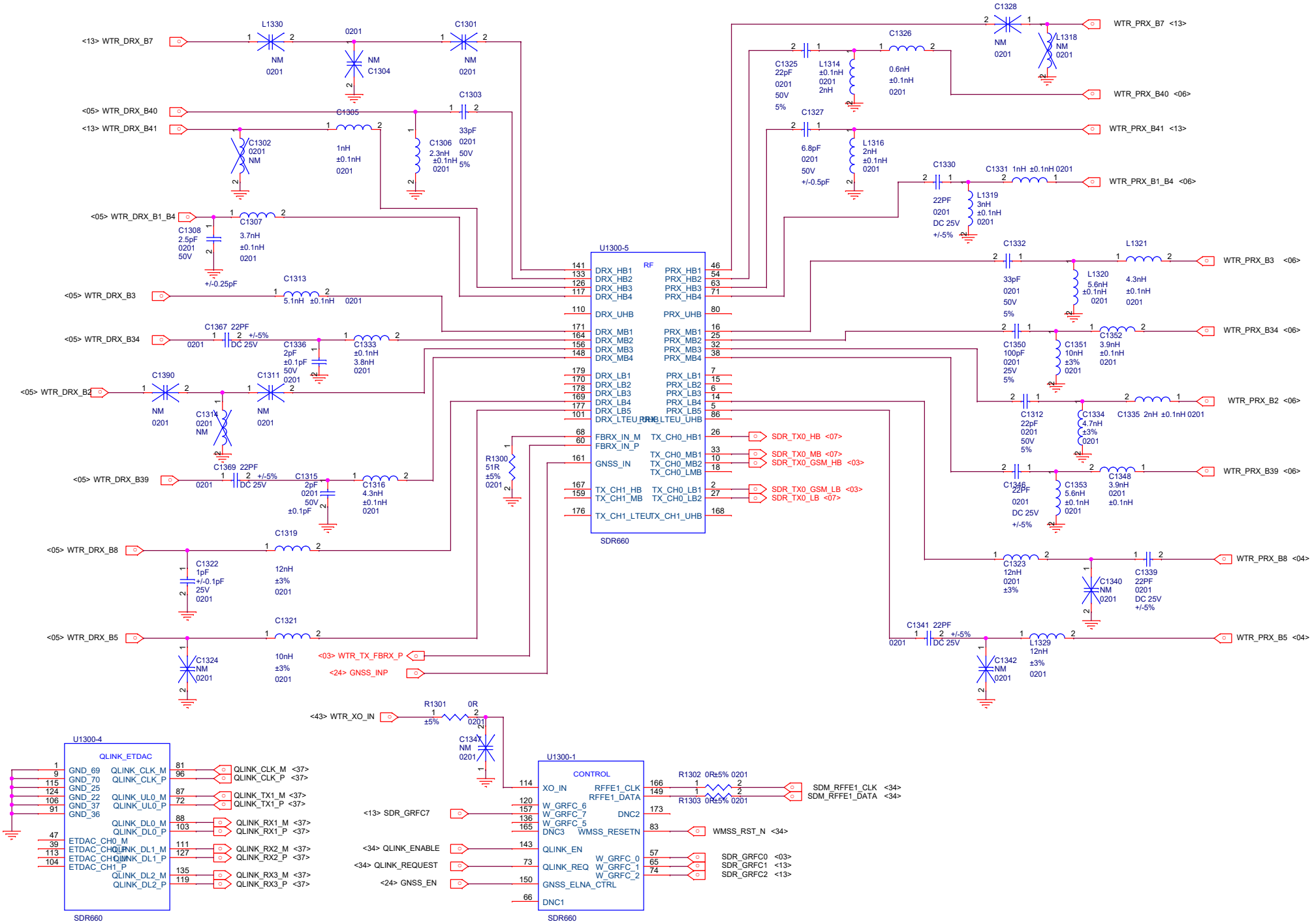
U1300-5
RF
SDR660
DRX_HB1
DRX_HB2
DRX_HB3
DRX_HB4
DRX_UHB
DRX_MB1
DRX_MB2
DRX_MB3
DRX_MB4
DRX_LB1
DRX_LB2
DRX_LB3
DRX_LB4
DRX_LB5
DRX_LTEU_UHB
FBRX_IN_M
FBRX_IN_P
GNSS_IN
TX_CH1_HB
TX_CH1_MB
TX_CH1_LTEU
PRX_HB1
PRX_HB2
PRX_HB3
PRX_HB4
PRX_UHB
PRX_MB1
PRX_MB2
PRX_MB3
PRX_MB4
PRX_LB1
PRX_LB2
PRX_LB3
PRX_LB4
PRX_LB5
PRX_LTEU_UHB
TX_CH0_HB1
TX_CH0_MB1
TX_CH0_MB2
TX_CH0_LMB
TX_CH0_LB1
TX_CH0_LB2
TX_CH1_UHB
<13> WTR_DRX_B7
<05> WTR_DRX_B40
<13> WTR_DRX_B41
<05> WTR_DRX_B1_B4
<05> WTR_DRX_B3
<05> WTR_DRX_B34
<05> WTR_DRX_B2
<05> WTR_DRX_B39
<05> WTR_DRX_B8
<05> WTR_DRX_B5
<03> WTR_TX_FBRX_P
<24> GNSS_INP
WTR_PRX_B7 <13>
WTR_PRX_B40 <06>
WTR_PRX_B41 <13>
WTR_PRX_B1_B4 <06>
WTR_PRX_B3 <06>
WTR_PRX_B34 <06>
WTR_PRX_B2 <06>
WTR_PRX_B39 <06>
WTR_PRX_B8 <04>
WTR_PRX_B5 <04>
SDR_TX0_HB <07>
SDR_TX0_MB <07>
SDR_TX0_GSM_HB <03>
SDR_TX0_GSM_LB <03>
SDR_TX0_LB <07>
<43> WTR_XO_IN
U1300-4
QLINK_ETDAC
GND_69
GND_70
GND_25
GND_22
GND_37
GND_36
ETDAC_CH0_M
ETDAC_CH0_P
ETDAC_CH1_M
ETDAC_CH1_P
QLINK_CLK_M
QLINK_CLK_P
QLINK_UL0_M
QLINK_UL0_P
QLINK_DL0_M
QLINK_DL0_P
QLINK_DL1_M
QLINK_DL1_P
QLINK_DL2_M
QLINK_DL2_P
QLINK_TX1_M <37>
QLINK_TX1_P <37>
QLINK_RX1_M <37>
QLINK_RX1_P <37>
QLINK_RX2_M <37>
QLINK_RX2_P <37>
QLINK_RX3_M <37>
QLINK_RX3_P <37>
SDR660
U1300-1
CONTROL
XO_IN
W_GRFC_6
W_GRFC_7
W_GRFC_5
DNC3
QLINK_EN
QLINK_REQ
GNSS_ELNA_CTRL
DNC1
RFFE1_CLK
RFFE1_DATA
DNC2
WMSS_RESETN
W_GRFC_0
W_GRFC_1
W_GRFC_2
<13> SDR_GRFC7
<34> QLINK_ENABLE
<34> QLINK_REQUEST
<24> GNSS_EN
SDM_RFFE1_CLK <34>
SDM_RFFE1_DATA <34>
WMSS_RST_N <34>
SDR_GRFC0 <03>
SDR_GRFC1 <13>
SDR_GRFC2 <13>

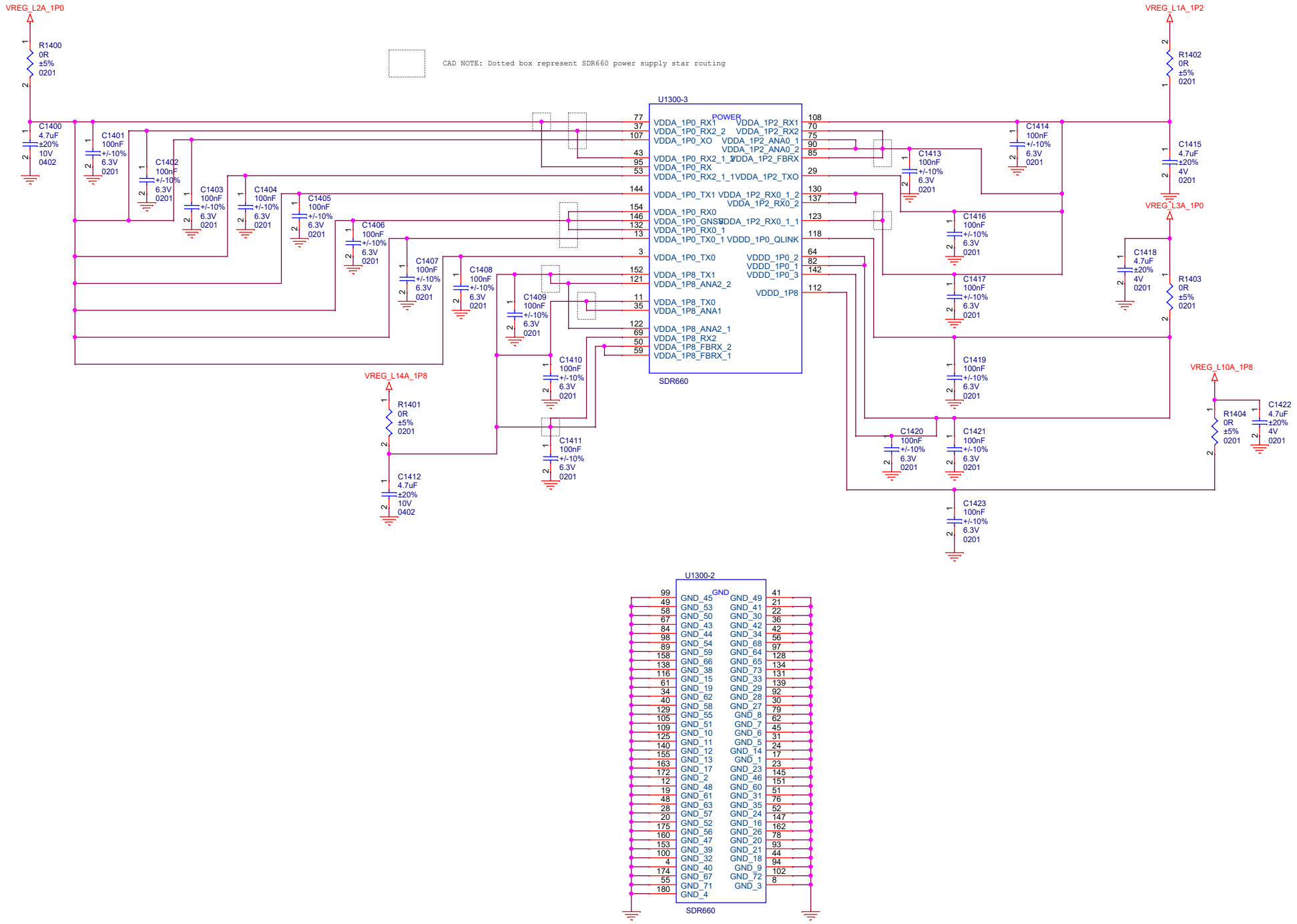
VREG_L2A_1P0
R1400
0R
±5%
0201
C1400
4.7uF
±20%
10V
0402
C1401
100nF
+/-10%
6.3V
0201
C1402
100nF
+/-10%
6.3V
0201
C1403
100nF
+/-10%
6.3V
0201
C1404
100nF
+/-10%
6.3V
0201
C1405
100nF
+/-10%
6.3V
0201
C1406
100nF
+/-10%
6.3V
0201
C1407
100nF
+/-10%
6.3V
0201
C1408
100nF
+/-10%
6.3V
0201
C1409
100nF
+/-10%
6.3V
0201
C1410
100nF
+/-10%
6.3V
0201
C1411
100nF
+/-10%
6.3V
0201
VREG_L14A_1P8
R1401
0R
±5%
0201
C1412
4.7uF
±20%
10V
0402
CAD NOTE: Dotted box represent SDR660 power supply star routing
U1300-3
POWER
VDDA_1P0_RX1
VDDA_1P0_RX2_2
VDDA_1P0_XO
VDDA_1P0_RX2_1_2
VDDA_1P0_RX
VDDA_1P0_RX2_1_1
VDDA_1P0_TX1
VDDA_1P0_RX0
VDDA_1P0_GNSS
VDDA_1P0_RX0_1
VDDA_1P0_TX0_1
VDDA_1P0_TX0
VDDA_1P8_TX1
VDDA_1P8_ANA2_2
VDDA_1P8_TX0
VDDA_1P8_ANA1
VDDA_1P8_ANA2_1
VDDA_1P8_RX2
VDDA_1P8_FBRX_2
VDDA_1P8_FBRX_1
VDDA_1P2_RX1
VDDA_1P2_RX2
VDDA_1P2_ANA0_1
VDDA_1P2_ANA0_2
VDDA_1P2_FBRX
VDDA_1P2_TXO
VDDA_1P2_RX0_1_2
VDDA_1P2_RX0_2
VDDA_1P2_RX0_1_1
VDDD_1P0_QLINK
VDDD_1P0_2
VDDD_1P0_1
VDDD_1P0_3
VDDD_1P8
SDR660
VREG_L1A_1P2
R1402
0R
±5%
0201
C1414
100nF
+/-10%
6.3V
0201
C1415
4.7uF
±20%
4V
0201
C1413
100nF
+/-10%
6.3V
0201
C1416
100nF
+/-10%
6.3V
0201
VREG_L3A_1P0
C1418
4.7uF
±20%
4V
0201
R1403
0R
±5%
0201
C1417
100nF
+/-10%
6.3V
0201
C1419
100nF
+/-10%
6.3V
0201
VREG_L10A_1P8
R1404
0R
±5%
0201
C1422
4.7uF
±20%
4V
0201
C1420
100nF
+/-10%
6.3V
0201
C1421
100nF
+/-10%
6.3V
0201
C1423
100nF
+/-10%
6.3V
0201
U1300-2
GND
GND_45
GND_53
GND_50
GND_43
GND_44
GND_54
GND_59
GND_66
GND_38
GND_15
GND_19
GND_62
GND_58
GND_55
GND_51
GND_10
GND_11
GND_12
GND_13
GND_17
GND_2
GND_48
GND_61
GND_63
GND_57
GND_52
GND_56
GND_47
GND_39
GND_32
GND_40
GND_67
GND_71
GND_4
GND_49
GND_41
GND_30
GND_42
GND_34
GND_68
GND_64
GND_65
GND_73
GND_33
GND_29
GND_28
GND_27
GND_8
GND_7
GND_6
GND_5
GND_14
GND_1
GND_23
GND_46
GND_60
GND_31
GND_35
GND_24
GND_16
GND_26
GND_20
GND_21
GND_18
GND_9
GND_72
GND_3
SDR660

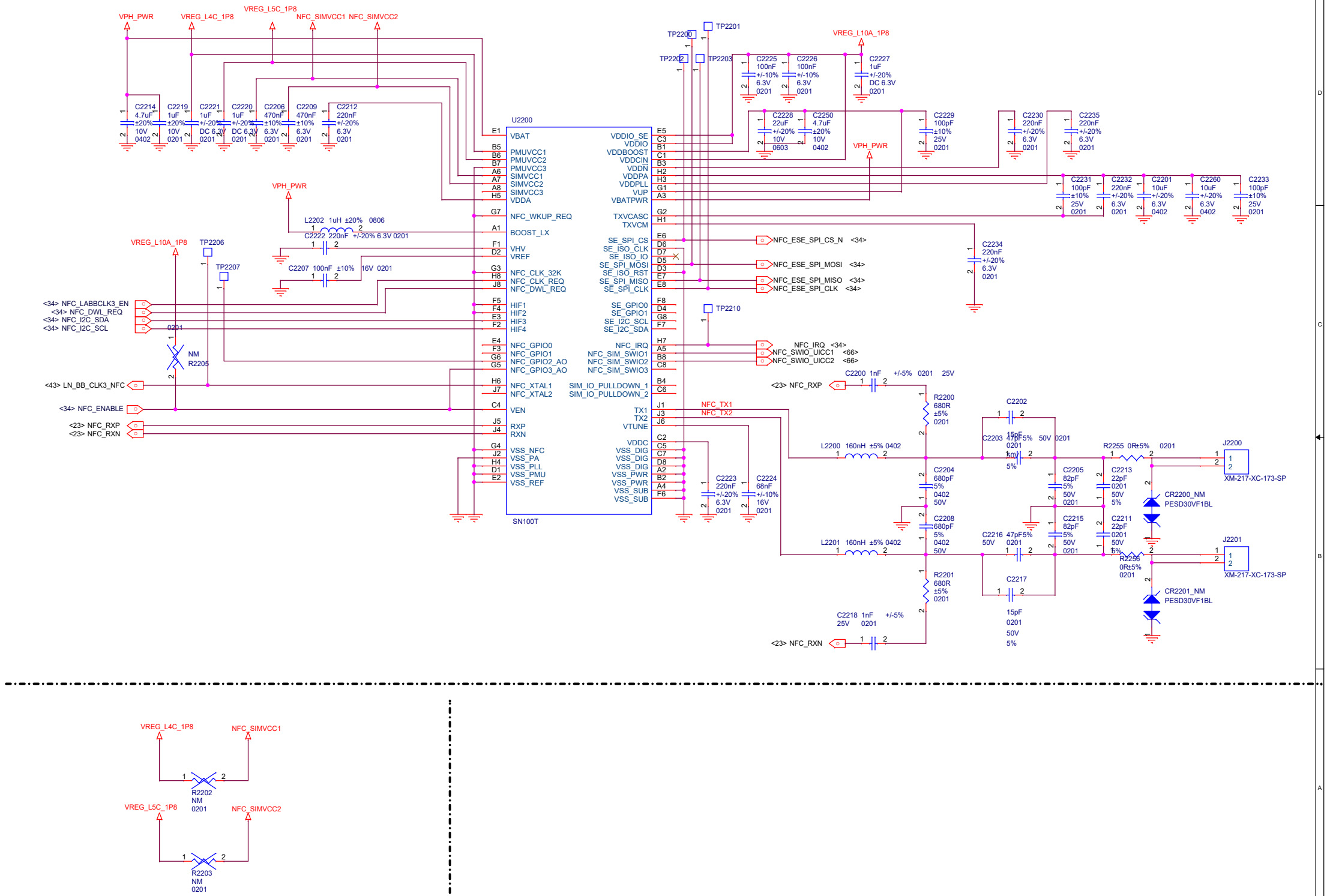
VPH_PWR
VREG_L4C_1P8
VREG_L5C_1P8
NFC_SIMVCC1
NFC_SIMVCC2
VREG_L10A_1P8
U2200
SN100T
VBAT
PMUVCC1
PMUVCC2
PMUVCC3
SIMVCC1
SIMVCC2
SIMVCC3
VDDA
NFC_WKUP_REQ
BOOST_LX
VHV
VREF
NFC_CLK_32K
NFC_CLK_REQ
NFC_DWL_REQ
HIF1
HIF2
HIF3
HIF4
NFC_GPIO0
NFC_GPIO1
NFC_GPIO2_AO
NFC_GPIO3_AO
NFC_XTAL1
NFC_XTAL2
VEN
RXP
RXN
VSS_NFC
VSS_PA
VSS_PLL
VSS_PMU
VSS_REF
VDDIO_SE
VDDIO
VDDBOOST
VDDCIN
VDDN
VDDPA
VDDPLL
VUP
VBATPWR
TXVCASC
TXVCM
SE_SPI_CS
SE_ISO_CLK
SE_ISO_IO
SE_SPI_MOSI
SE_ISO_RST
SE_SPI_MISO
SE_SPI_CLK
SE_GPIO0
SE_GPIO1
SE_I2C_SCL
SE_I2C_SDA
NFC_IRQ
NFC_SIM_SWIO1
NFC_SIM_SWIO2
NFC_SIM_SWIO3
SIM_IO_PULLDOWN_1
SIM_IO_PULLDOWN_2
TX1
TX2
VTUNE
VDDC
VSS_DIG
VSS_PWR
VSS_SUB
NFC_ESE_SPI_CS_N <34>
NFC_ESE_SPI_MOSI <34>
NFC_ESE_SPI_MISO <34>
NFC_ESE_SPI_CLK <34>
NFC_IRQ <34>
NFC_SWIO_UICC1 <66>
NFC_SWIO_UICC2 <66>
NFC_TX1
NFC_TX2
<34> NFC_LABBCLK3_EN
<34> NFC_DWL_REQ
<34> NFC_I2C_SDA
<34> NFC_I2C_SCL
<43> LN_BB_CLK3_NFC
<34> NFC_ENABLE
<23> NFC_RXP
<23> NFC_RXN
L2202 1uH ±20% 0806
C2222 220nF +/-20% 6.3V 0201
C2207 100nF ±10% 16V 0201
R2205 NM
L2200 160nH ±5% 0402
L2201 160nH ±5% 0402
R2200 680R ±5% 0201
R2201 680R ±5% 0201
C2200 1nF +/-5% 0201 25V
C2218 1nF +/-5% 25V 0201
C2202 15pF 0201 50V 5%
C2203 47pF5% 50V 0201
C2216 47pF5% 50V 0201
C2217 15pF 0201 50V 5%
C2204 680pF 5% 0402 50V
C2208 680pF 5% 0402 50V
C2205 82pF 5% 50V 0201
C2215 82pF 5% 50V 0201
C2213 22pF 0201 50V 5%
C2211 22pF 0201 50V 5%
R2255 0R±5% 0201
R2256 0R±5% 0201
J2200
J2201
XM-217-XC-173-SP
CR2200_NM PESD30VF1BL
CR2201_NM PESD30VF1BL
C2223 220nF +/-20% 6.3V 0201
C2224 68nF +/-10% 16V 0201
C2225 100nF +/-10% 6.3V 0201
C2226 100nF +/-10% 6.3V 0201
C2227 1uF +/-20% DC 6.3V 0201
C2228 22uF +/-20% 10V 0603
C2250 4.7uF ±20% 10V 0402
C2229 100pF ±10% 25V 0201
C2230 220nF +/-20% 6.3V 0201
C2235 220nF +/-20% 6.3V 0201
C2231 100pF ±10% 25V 0201
C2232 220nF +/-20% 6.3V 0201
C2201 10uF +/-20% 6.3V 0402
C2260 10uF +/-20% 6.3V 0402
C2233 100pF ±10% 25V 0201
C2234 220nF +/-20% 6.3V 0201
C2214 4.7uF ±20% 10V 0402
C2219 1uF ±20% 10V 0201
C2221 1uF +/-20% DC 6.3V 0201
C2220 1uF +/-20% DC 6.3V 0201
C2206 470nF ±10% 6.3V 0201
C2209 470nF ±10% 6.3V 0201
C2212 220nF +/-20% 6.3V 0201
TP2200
TP2201
TP2202
TP2203
TP2206
TP2207
TP2210
R2202 NM 0201
R2203 NM 0201

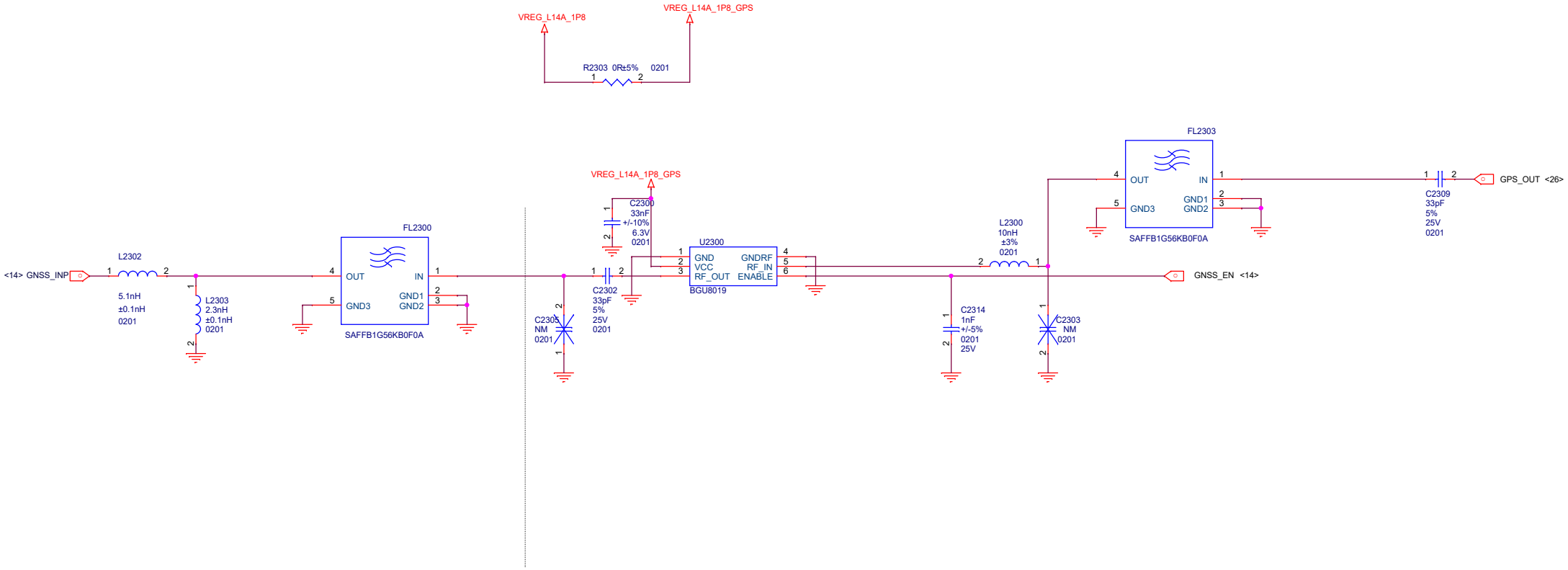
VREG_L14A_1P8
VREG_L14A_1P8_GPS
R2303 0R±5% 0201
<14> GNSS_INP
L2302
5.1nH
±0.1nH
0201
L2303
2.3nH
±0.1nH
0201
FL2300
OUT
IN
GND3
GND1
GND2
SAFFB1G56KB0F0A
VREG_L14A_1P8_GPS
C2300
33nF
+/-10%
6.3V
0201
C2302
33pF
5%
25V
0201
C2305
NM
0201
U2300
GND
VCC
RF_OUT
GNDRF
RF_IN
ENABLE
BGU8019
L2300
10nH
±3%
0201
C2314
1nF
+/-5%
0201
25V
C2303
NM
0201
GNSS_EN <14>
FL2303
OUT
IN
GND3
GND1
GND2
SAFFB1G56KB0F0A
C2309
33pF
5%
25V
0201
GPS_OUT <26>

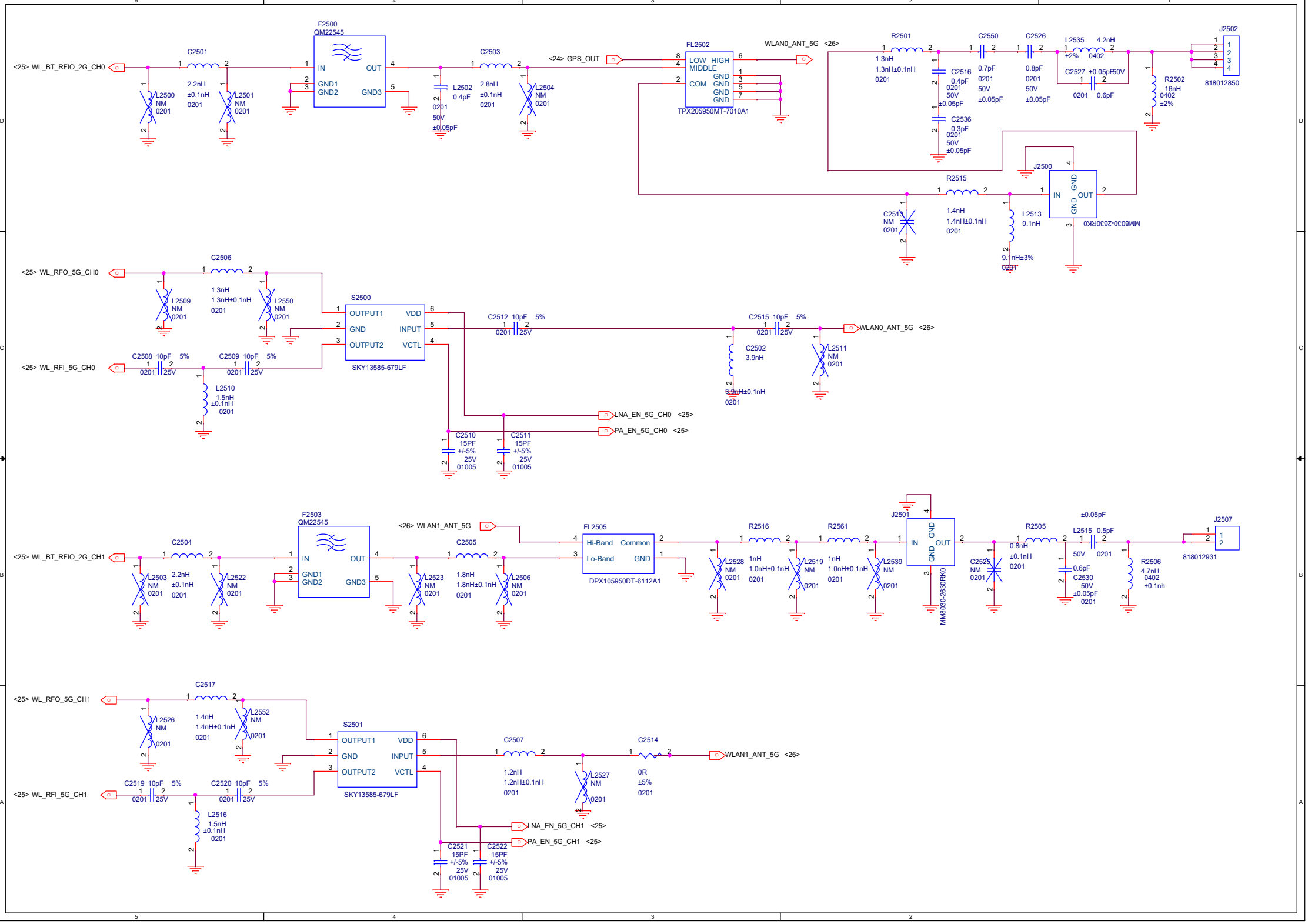
F2500
QM22545
IN
OUT
GND1
GND2
GND3
C2501
2.2nH
±0.1nH
0201
L2500
NM
0201
L2501
NM
0201
<25> WL_BT_RFIO_2G_CH0
C2503
2.8nH
±0.1nH
0201
L2502
0.4pF
0201
50V
±0.05pF
L2504
NM
0201
<24> GPS_OUT
FL2502
LOW HIGH
MIDDLE
COM
GND
TPX205950MT-7010A1
WLAN0_ANT_5G <26>
R2501
1.3nH
1.3nH±0.1nH
0201
C2516
0.4pF
0201
50V
±0.05pF
C2536
0.3pF
0201
50V
±0.05pF
C2550
0.7pF
0201
50V
±0.05pF
C2526
0.8pF
0201
50V
±0.05pF
L2535
4.2nH
±2%
0402
C2527
±0.05pF
50V
0201
0.6pF
R2502
16nH
0402
±2%
J2502
818012850
J2500
MM8030-2630RK0
R2515
1.4nH
1.4nH±0.1nH
0201
C2513
NM
0201
L2513
9.1nH
9.1nH±3%
0201
<25> WL_RFO_5G_CH0
C2506
1.3nH
1.3nH±0.1nH
0201
L2509
NM
0201
L2550
NM
0201
S2500
OUTPUT1
GND
OUTPUT2
VDD
INPUT
VCTL
SKY13585-679LF
<25> WL_RFI_5G_CH0
C2508 10pF 5%
0201 25V
C2509 10pF 5%
0201 25V
L2510
1.5nH
±0.1nH
0201
C2512 10pF 5%
0201 25V
C2515 10pF 5%
0201 25V
WLAN0_ANT_5G <26>
C2502
3.9nH
3.9nH±0.1nH
0201
L2511
NM
0201
LNA_EN_5G_CH0 <25>
PA_EN_5G_CH0 <25>
C2510
15PF
+/-5%
25V
01005
C2511
15PF
+/-5%
25V
01005
F2503
QM22545
<26> WLAN1_ANT_5G
<25> WL_BT_RFIO_2G_CH1
C2504
2.2nH
±0.1nH
0201
L2503
NM
0201
L2522
NM
0201
C2505
1.8nH
1.8nH±0.1nH
0201
L2523
NM
0201
L2506
NM
0201
FL2505
Hi-Band Common
Lo-Band GND
DPX105950DT-6112A1
R2516
1nH
1.0nH±0.1nH
0201
L2528
NM
0201
R2561
1nH
1.0nH±0.1nH
0201
L2519
NM
0201
L2539
NM
0201
J2501
MM8030-2630RK0
C2525
NM
0201
R2505
0.8nH
±0.1nH
0201
L2515
0.5pF
0201
±0.05pF
C2530
0.6pF
50V
±0.05pF
0201
R2506
4.7nH
0402
±0.1nh
J2507
818012931
<25> WL_RFO_5G_CH1
C2517
1.4nH
1.4nH±0.1nH
0201
L2526
NM
0201
L2552
NM
0201
S2501
OUTPUT1
GND
OUTPUT2
VDD
INPUT
VCTL
SKY13585-679LF
<25> WL_RFI_5G_CH1
C2519 10pF 5%
0201 25V
C2520 10pF 5%
0201 25V
L2516
1.5nH
±0.1nH
0201
C2507
1.2nH
1.2nH±0.1nH
0201
L2527
NM
0201
C2514
0R
±5%
0201
WLAN1_ANT_5G <26>
LNA_EN_5G_CH1 <25>
PA_EN_5G_CH1 <25>
C2521
15PF
+/-5%
25V
01005
C2522
15PF
+/-5%
25V
01005

MODE	Operation
00	NATIVE
01	TIC
10	ATEST
11	TEST

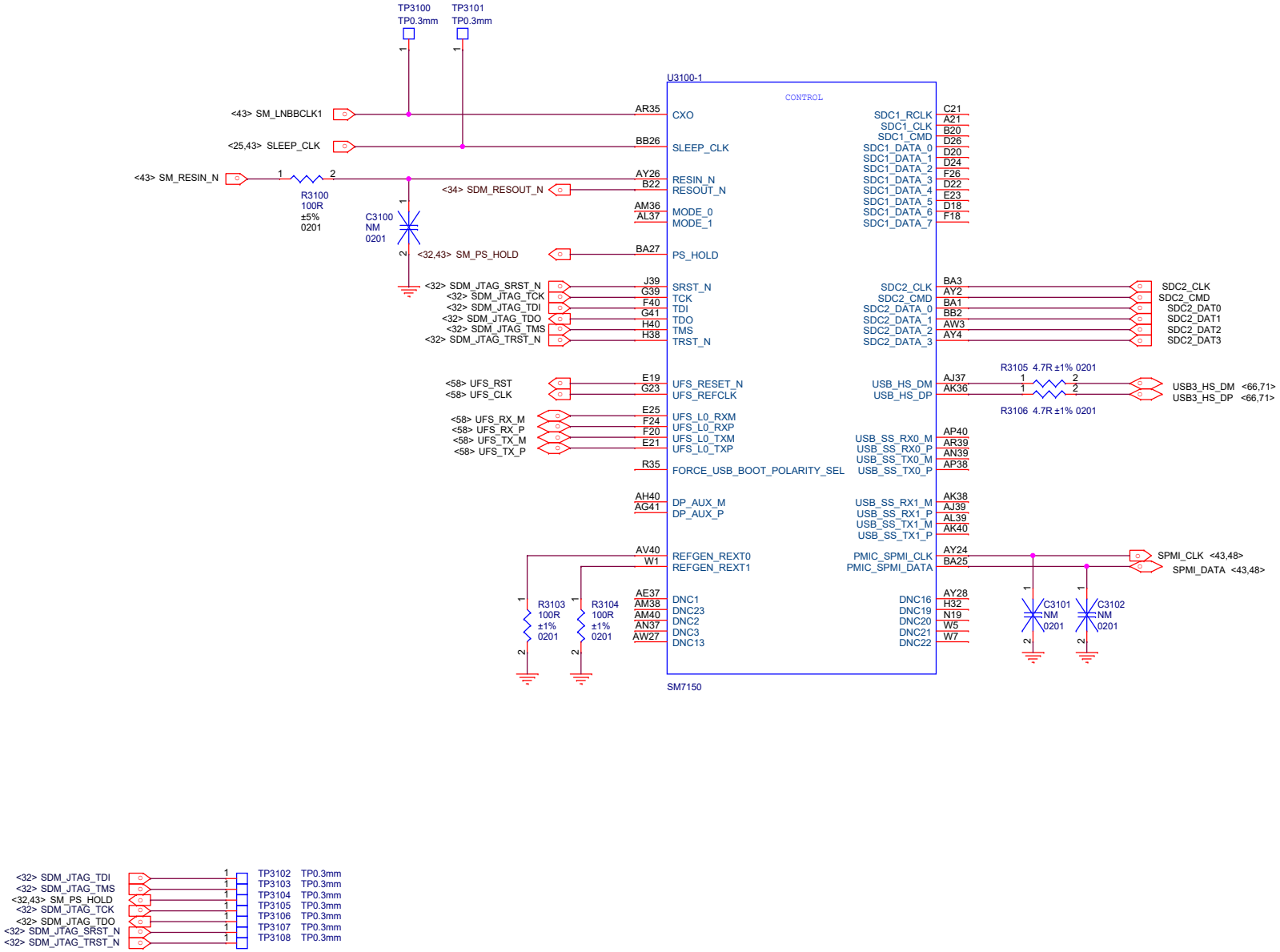

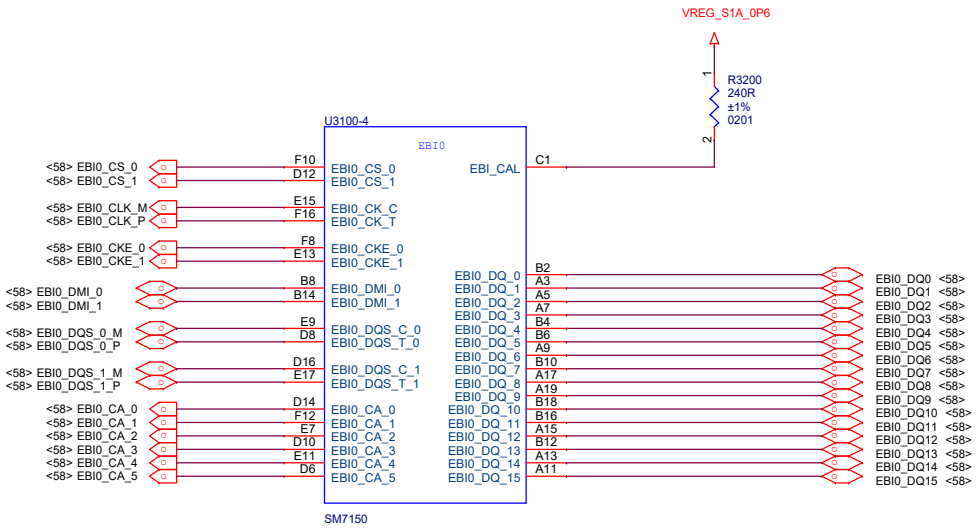
VREG_S1A_0P6
R3200
240R
±1%
0201
U3100-4
EBI0
EBI_CAL
C1
<58> EBI0_CS_0
<58> EBI0_CS_1
F10
D12
EBI0_CS_0
EBI0_CS_1
<58> EBI0_CLK_M
<58> EBI0_CLK_P
E15
F16
EBI0_CK_C
EBI0_CK_T
<58> EBI0_CKE_0
<58> EBI0_CKE_1
F8
E13
EBI0_CKE_0
EBI0_CKE_1
<58> EBI0_DMI_0
<58> EBI0_DMI_1
B8
B14
EBI0_DMI_0
EBI0_DMI_1
<58> EBI0_DQS_0_M
<58> EBI0_DQS_0_P
E9
D8
EBI0_DQS_C_0
EBI0_DQS_T_0
<58> EBI0_DQS_1_M
<58> EBI0_DQS_1_P
D16
E17
EBI0_DQS_C_1
EBI0_DQS_T_1
<58> EBI0_CA_0
<58> EBI0_CA_1
<58> EBI0_CA_2
<58> EBI0_CA_3
<58> EBI0_CA_4
<58> EBI0_CA_5
D14
F12
E7
D10
E11
D6
EBI0_CA_0
EBI0_CA_1
EBI0_CA_2
EBI0_CA_3
EBI0_CA_4
EBI0_CA_5
EBI0_DQ_0
EBI0_DQ_1
EBI0_DQ_2
EBI0_DQ_3
EBI0_DQ_4
EBI0_DQ_5
EBI0_DQ_6
EBI0_DQ_7
EBI0_DQ_8
EBI0_DQ_9
EBI0_DQ_10
EBI0_DQ_11
EBI0_DQ_12
EBI0_DQ_13
EBI0_DQ_14
EBI0_DQ_15
B2
A3
A5
A7
B4
B6
A9
B10
A17
A19
B18
B16
A15
B12
A13
A11
EBI0_DQ0 <58>
EBI0_DQ1 <58>
EBI0_DQ2 <58>
EBI0_DQ3 <58>
EBI0_DQ4 <58>
EBI0_DQ5 <58>
EBI0_DQ6 <58>
EBI0_DQ7 <58>
EBI0_DQ8 <58>
EBI0_DQ9 <58>
EBI0_DQ10 <58>
EBI0_DQ11 <58>
EBI0_DQ12 <58>
EBI0_DQ13 <58>
EBI0_DQ14 <58>
EBI0_DQ15 <58>
SM7150

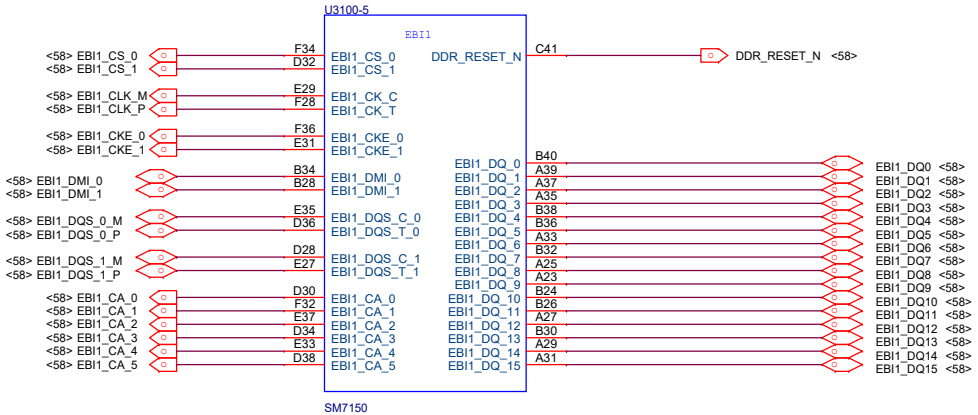
U3100-5
EBI1
DDR_RESET_N
C41
DDR_RESET_N <58>
<58> EBI1_CS_0
<58> EBI1_CS_1
F34
D32
EBI1_CS_0
EBI1_CS_1
<58> EBI1_CLK_M
<58> EBI1_CLK_P
E29
F28
EBI1_CK_C
EBI1_CK_T
<58> EBI1_CKE_0
<58> EBI1_CKE_1
F36
E31
EBI1_CKE_0
EBI1_CKE_1
<58> EBI1_DMI_0
<58> EBI1_DMI_1
B34
B28
EBI1_DMI_0
EBI1_DMI_1
<58> EBI1_DQS_0_M
<58> EBI1_DQS_0_P
E35
D36
EBI1_DQS_C_0
EBI1_DQS_T_0
<58> EBI1_DQS_1_M
<58> EBI1_DQS_1_P
D28
E27
EBI1_DQS_C_1
EBI1_DQS_T_1
<58> EBI1_CA_0
<58> EBI1_CA_1
<58> EBI1_CA_2
<58> EBI1_CA_3
<58> EBI1_CA_4
<58> EBI1_CA_5
D30
F32
E37
D34
E33
D38
EBI1_CA_0
EBI1_CA_1
EBI1_CA_2
EBI1_CA_3
EBI1_CA_4
EBI1_CA_5
EBI1_DQ_0
EBI1_DQ_1
EBI1_DQ_2
EBI1_DQ_3
EBI1_DQ_4
EBI1_DQ_5
EBI1_DQ_6
EBI1_DQ_7
EBI1_DQ_8
EBI1_DQ_9
EBI1_DQ_10
EBI1_DQ_11
EBI1_DQ_12
EBI1_DQ_13
EBI1_DQ_14
EBI1_DQ_15
B40
A39
A37
A35
B38
B36
A33
B32
A25
A23
B24
B26
A27
B30
A29
A31
EBI1_DQ0 <58>
EBI1_DQ1 <58>
EBI1_DQ2 <58>
EBI1_DQ3 <58>
EBI1_DQ4 <58>
EBI1_DQ5 <58>
EBI1_DQ6 <58>
EBI1_DQ7 <58>
EBI1_DQ8 <58>
EBI1_DQ9 <58>
EBI1_DQ10 <58>
EBI1_DQ11 <58>
EBI1_DQ12 <58>
EBI1_DQ13 <58>
EBI1_DQ14 <58>
EBI1_DQ15 <58>
SM7150

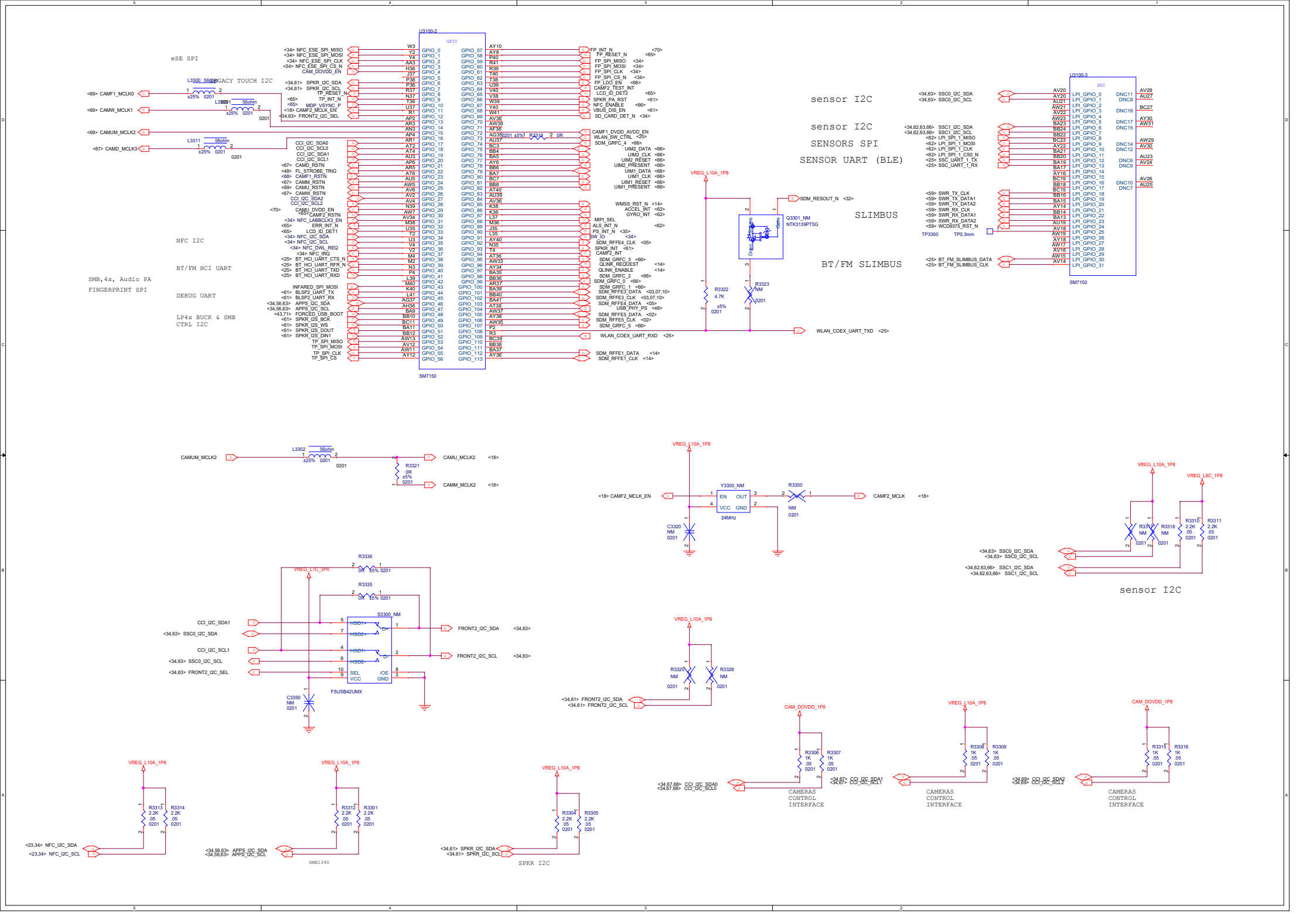
U3100-2
GPIO
SM7150
eSE SPI
LEGACY TOUCH I2C
NFC I2C
BT/FM HCI UART
SMB,4x, Audio PA
FINGERPRINT SPI
DEBUG UART
LP4x BUCK & SMB
CTRL I2C
sensor I2C
sensor I2C
SENSORS SPI
SENSOR UART (BLE)
SLIMBUS
BT/FM SLIMBUS
U3100-3
SSC
SM7150
Q3301_NM
NTK3139PT5G
VREG_L10A_1P8
CAMAU_MCLK2
CAMU_MCLK2
CAMM_MCLK2
CAMF2_MCLK_EN
CAMF2_MCLK
Y3300_NM
24MHz
VREG_L8C_1P8
sensor I2C
VREG_L7C_3P0
S3300_NM
FSUSB42UMX
FRONT2_I2C_SDA
FRONT2_I2C_SCL
CAM_DOVDD_1P8
CAMERAS
CONTROL
INTERFACE
SMB1390
SPKR I2C

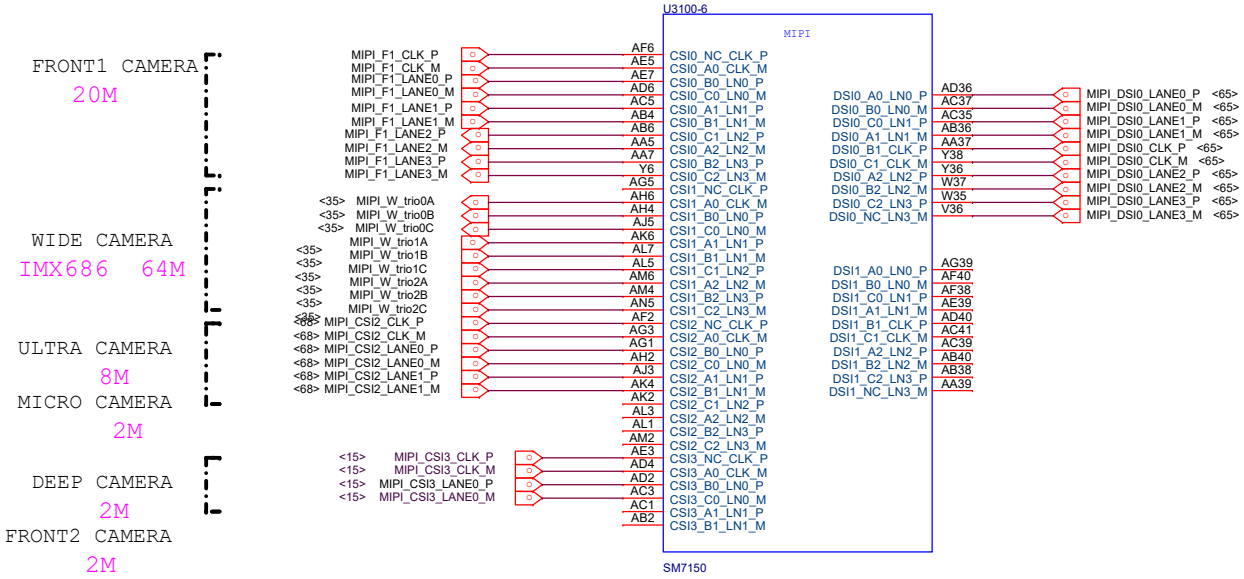
FRONT1 CAMERA
20M
WIDE CAMERA
IMX686 64M
ULTRA CAMERA
8M
MICRO CAMERA
2M
DEEP CAMERA
2M
FRONT2 CAMERA
2M
U3100-6
MIPI
MIPI_F1_CLK_P AF6 CSI0_NC_CLK_P
MIPI_F1_CLK_M AE5 CSI0_A0_CLK_M
MIPI_F1_LANE0_P AE7 CSI0_B0_LN0_P
MIPI_F1_LANE0_M AD6 CSI0_C0_LN0_M
MIPI_F1_LANE1_P AC5 CSI0_A1_LN1_P
MIPI_F1_LANE1_M AB4 CSI0_B1_LN1_M
MIPI_F1_LANE2_P AB6 CSI0_C1_LN2_P
MIPI_F1_LANE2_M AA5 CSI0_A2_LN2_M
MIPI_F1_LANE3_P AA7 CSI0_B2_LN3_P
MIPI_F1_LANE3_M Y6 CSI0_C2_LN3_M
AG5 CSI1_NC_CLK_P
<35> MIPI_W_trio0A AH6 CSI1_A0_CLK_M
<35> MIPI_W_trio0B AH4 CSI1_B0_LN0_P
<35> MIPI_W_trio0C AJ5 CSI1_C0_LN0_M
AK6 CSI1_A1_LN1_P
<35> MIPI_W_trio1A AL7 CSI1_B1_LN1_M
<35> MIPI_W_trio1B AL5 CSI1_C1_LN2_P
<35> MIPI_W_trio1C AM6 CSI1_A2_LN2_M
<35> MIPI_W_trio2A AM4 CSI1_B2_LN3_P
<35> MIPI_W_trio2B AN5 CSI1_C2_LN3_M
<35> MIPI_W_trio2C AF2 CSI2_NC_CLK_P
<68> MIPI_CSI2_CLK_P AG3 CSI2_A0_CLK_M
<68> MIPI_CSI2_CLK_M AG1 CSI2_B0_LN0_P
<68> MIPI_CSI2_LANE0_P AH2 CSI2_C0_LN0_M
<68> MIPI_CSI2_LANE0_M AJ3 CSI2_A1_LN1_P
<68> MIPI_CSI2_LANE1_P AK4 CSI2_B1_LN1_M
<68> MIPI_CSI2_LANE1_M AK2 CSI2_C1_LN2_P
AL3 CSI2_A2_LN2_M
AL1 CSI2_B2_LN3_P
AM2 CSI2_C2_LN3_M
<15> MIPI_CSI3_CLK_P AE3 CSI3_NC_CLK_P
<15> MIPI_CSI3_CLK_M AD4 CSI3_A0_CLK_M
<15> MIPI_CSI3_LANE0_P AD2 CSI3_B0_LN0_P
<15> MIPI_CSI3_LANE0_M AC3 CSI3_C0_LN0_M
AC1 CSI3_A1_LN1_P
AB2 CSI3_B1_LN1_M
SM7150
DSI0_A0_LN0_P AD36 MIPI_DSI0_LANE0_P <65>
DSI0_B0_LN0_M AC37 MIPI_DSI0_LANE0_M <65>
DSI0_C0_LN1_P AC35 MIPI_DSI0_LANE1_P <65>
DSI0_A1_LN1_M AB36 MIPI_DSI0_LANE1_M <65>
DSI0_B1_CLK_P AA37 MIPI_DSI0_CLK_P <65>
DSI0_C1_CLK_M Y38 MIPI_DSI0_CLK_M <65>
DSI0_A2_LN2_P Y36 MIPI_DSI0_LANE2_P <65>
DSI0_B2_LN2_M W37 MIPI_DSI0_LANE2_M <65>
DSI0_C2_LN3_P W35 MIPI_DSI0_LANE3_P <65>
DSI0_NC_LN3_M V36 MIPI_DSI0_LANE3_M <65>
DSI1_A0_LN0_P AG39
DSI1_B0_LN0_M AF40
DSI1_C0_LN1_P AF38
DSI1_A1_LN1_M AE39
DSI1_B1_CLK_P AD40
DSI1_C1_CLK_M AC41
DSI1_A2_LN2_P AC39
DSI1_B2_LN2_M AB40
DSI1_C2_LN3_P AB38
DSI1_NC_LN3_M AA39

MIPI SWITCH

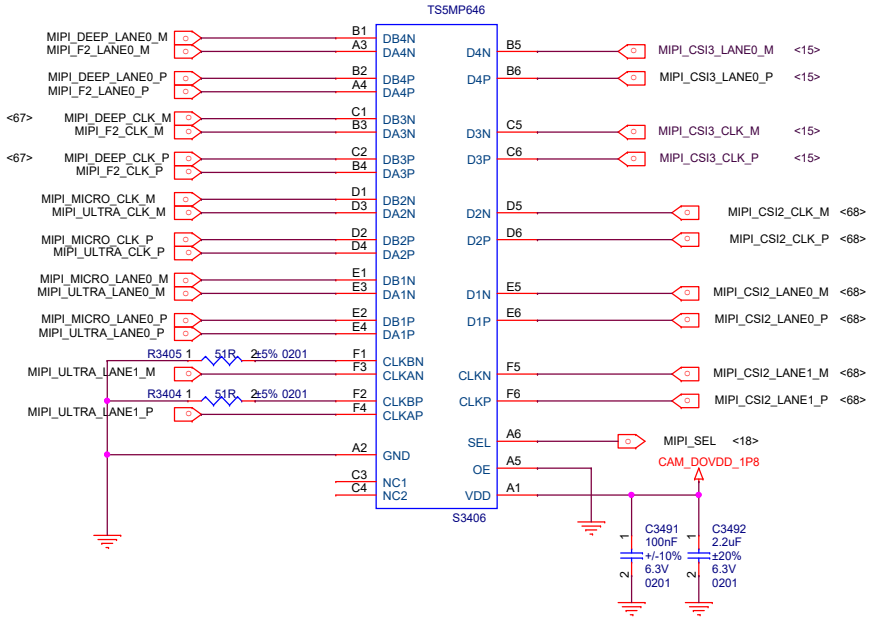
TS5MP646
MIPI_DEEP_LANE0_M B1 DB4N
MIPI_F2_LANE0_M A3 DA4N
MIPI_DEEP_LANE0_P B2 DB4P
MIPI_F2_LANE0_P A4 DA4P
<67> MIPI_DEEP_CLK_M C1 DB3N
MIPI_F2_CLK_M B3 DA3N
<67> MIPI_DEEP_CLK_P C2 DB3P
MIPI_F2_CLK_P B4 DA3P
MIPI_MICRO_CLK_M D1 DB2N
MIPI_ULTRA_CLK_M D3 DA2N
MIPI_MICRO_CLK_P D2 DB2P
MIPI_ULTRA_CLK_P D4 DA2P
MIPI_MICRO_LANE0_M E1 DB1N
MIPI_ULTRA_LANE0_M E3 DA1N
MIPI_MICRO_LANE0_P E2 DB1P
MIPI_ULTRA_LANE0_P E4 DA1P
R3405 1 51R 2 ±5% 0201
MIPI_ULTRA_LANE1_M F1 CLKBN
F3 CLKAN
R3404 1 51R 2 ±5% 0201
MIPI_ULTRA_LANE1_P F2 CLKBP
F4 CLKAP
A2 GND
C3 NC1
C4 NC2
D4N B5 MIPI_CSI3_LANE0_M <15>
D4P B6 MIPI_CSI3_LANE0_P <15>
D3N C5 MIPI_CSI3_CLK_M <15>
D3P C6 MIPI_CSI3_CLK_P <15>
D2N D5 MIPI_CSI2_CLK_M <68>
D2P D6 MIPI_CSI2_CLK_P <68>
D1N E5 MIPI_CSI2_LANE0_M <68>
D1P E6 MIPI_CSI2_LANE0_P <68>
CLKN F5 MIPI_CSI2_LANE1_M <68>
CLKP F6 MIPI_CSI2_LANE1_P <68>
SEL A6 MIPI_SEL <18>
OE A5
VDD A1
CAM_DOVDD_1P8
S3406
C3491 100nF +/-10% 6.3V 0201
C3492 2.2uF ±20% 6.3V 0201

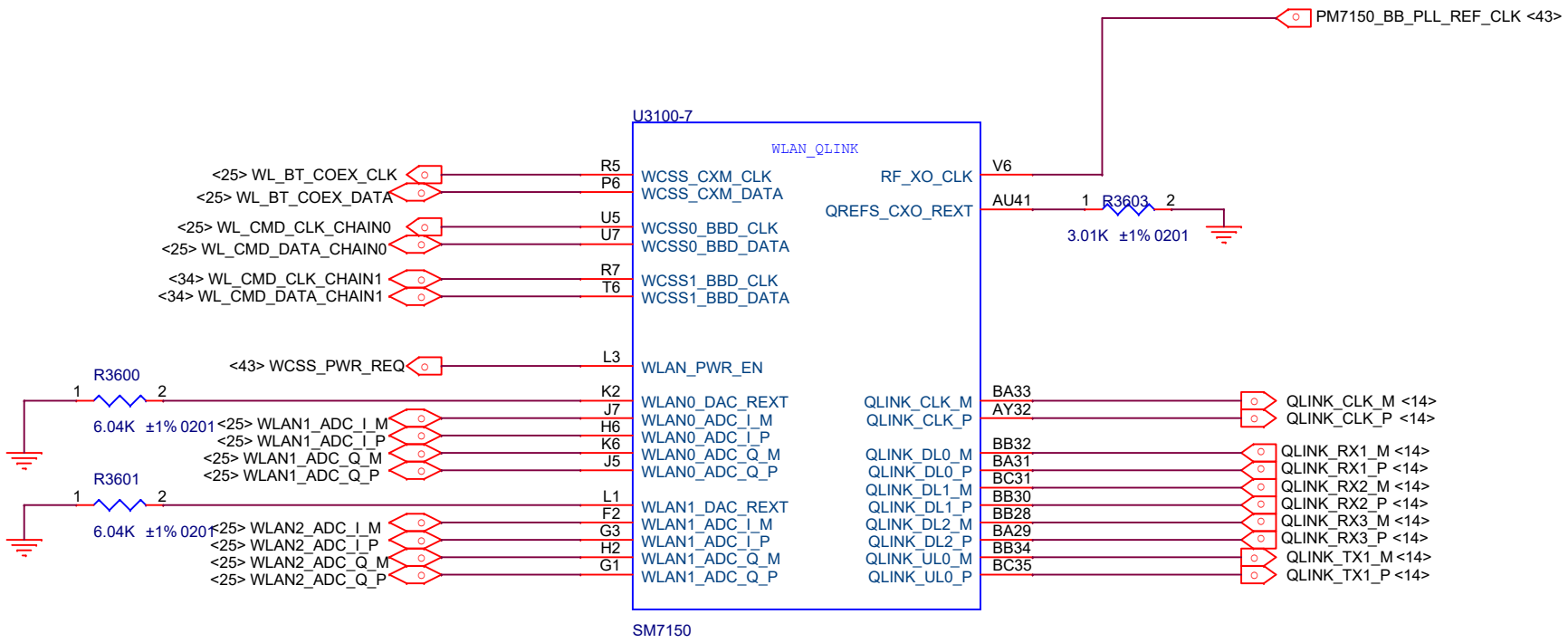
PM7150_BB_PLL_REF_CLK <43>
U3100-7
WLAN_QLINK
<25> WL_BT_COEX_CLK
<25> WL_BT_COEX_DATA
<25> WL_CMD_CLK_CHAIN0
<25> WL_CMD_DATA_CHAIN0
<34> WL_CMD_CLK_CHAIN1
<34> WL_CMD_DATA_CHAIN1
<43> WCSS_PWR_REQ
R5
P6
U5
U7
R7
T6
L3
WCSS_CXM_CLK
WCSS_CXM_DATA
WCSS0_BBD_CLK
WCSS0_BBD_DATA
WCSS1_BBD_CLK
WCSS1_BBD_DATA
WLAN_PWR_EN
RF_XO_CLK
QREFS_CXO_REXT
V6
AU41
R3603
3.01K ±1% 0201
R3600
6.04K ±1% 0201
R3601
6.04K ±1% 0201
K2
J7
H6
K6
J5
L1
F2
G3
H2
G1
WLAN0_DAC_REXT
WLAN0_ADC_I_M
WLAN0_ADC_I_P
WLAN0_ADC_Q_M
WLAN0_ADC_Q_P
WLAN1_DAC_REXT
WLAN1_ADC_I_M
WLAN1_ADC_I_P
WLAN1_ADC_Q_M
WLAN1_ADC_Q_P
<25> WLAN1_ADC_I_M
<25> WLAN1_ADC_I_P
<25> WLAN1_ADC_Q_M
<25> WLAN1_ADC_Q_P
<25> WLAN2_ADC_I_M
<25> WLAN2_ADC_I_P
<25> WLAN2_ADC_Q_M
<25> WLAN2_ADC_Q_P
QLINK_CLK_M
QLINK_CLK_P
QLINK_DL0_M
QLINK_DL0_P
QLINK_DL1_M
QLINK_DL1_P
QLINK_DL2_M
QLINK_DL2_P
QLINK_UL0_M
QLINK_UL0_P
BA33
AY32
BB32
BA31
BC31
BB30
BB28
BA29
BB34
BC35
QLINK_CLK_M <14>
QLINK_CLK_P <14>
QLINK_RX1_M <14>
QLINK_RX1_P <14>
QLINK_RX2_M <14>
QLINK_RX2_P <14>
QLINK_RX3_M <14>
QLINK_RX3_P <14>
QLINK_TX1_M <14>
QLINK_TX1_P <14>
SM7150

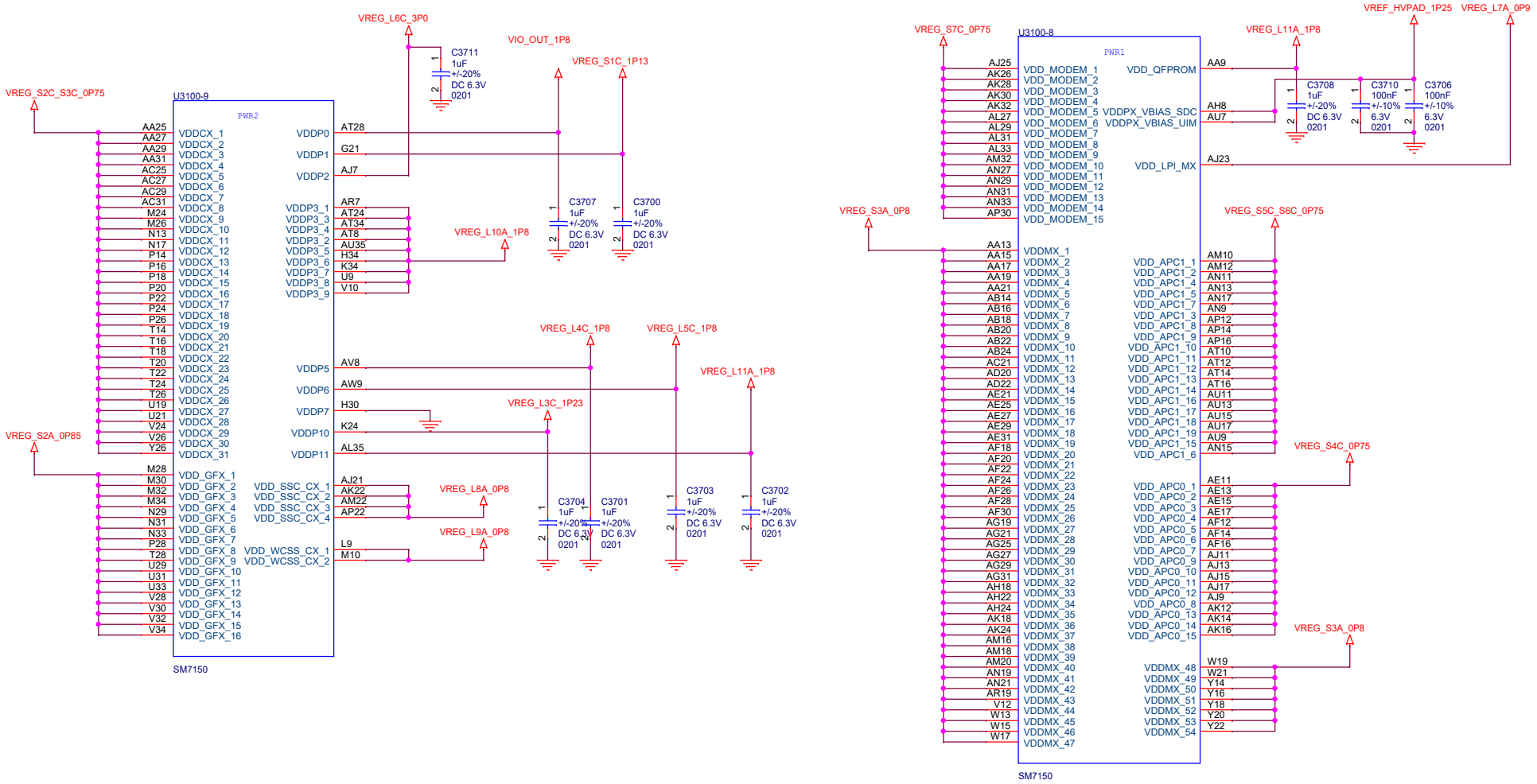
U3100-9
PWR2
VREG_S2C_S3C_0P75
VREG_L6C_3P0
VIO_OUT_1P8
VREG_S1C_1P13
C3711 1uF +/-20% DC 6.3V 0201
C3707 1uF +/-20% DC 6.3V 0201
C3700 1uF +/-20% DC 6.3V 0201
VREG_L10A_1P8
VREG_L4C_1P8
VREG_L5C_1P8
VREG_L11A_1P8
VREG_L3C_1P23
VREG_S2A_0P85
VREG_L8A_0P8
VREG_L9A_0P8
C3704 1uF +/-20% DC 6.3V 0201
C3701 1uF +/-20% DC 6.3V 0201
C3703 1uF +/-20% DC 6.3V 0201
C3702 1uF +/-20% DC 6.3V 0201
SM7150
U3100-8
PWR1
VREG_S7C_0P75
VREG_L11A_1P8
VREF_HVPAD_1P25
VREG_L7A_0P9
C3708 1uF +/-20% DC 6.3V 0201
C3710 100nF +/-10% 6.3V 0201
C3706 100nF +/-10% 6.3V 0201
VREG_S3A_0P8
VREG_S5C_S6C_0P75
VREG_S4C_0P75
VREG_S3A_0P8
SM7150

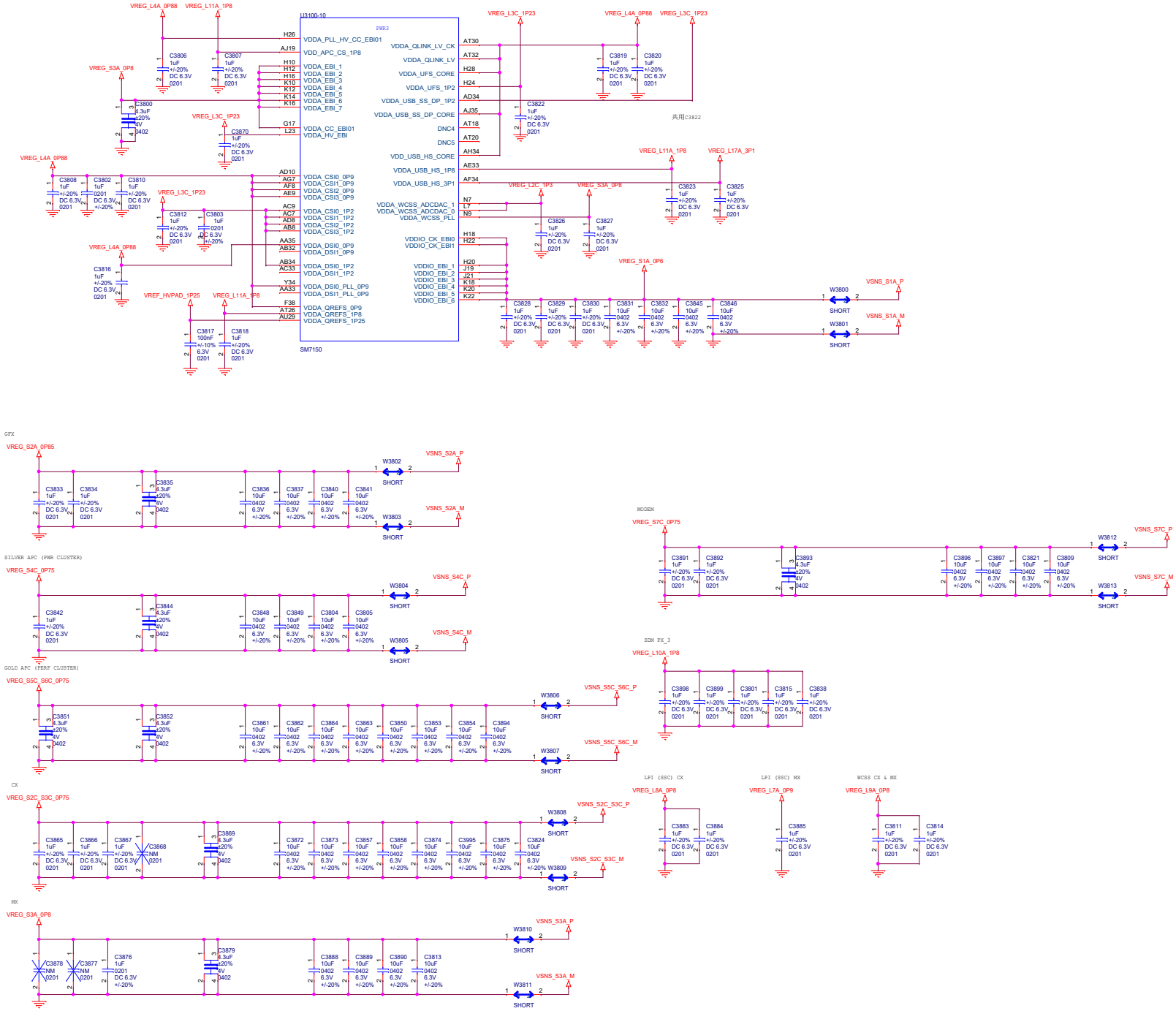
U3100-10
PWR3
SM7150
VDDA_PLL_HV_CC_EBI01
VDD_APC_CS_1P8
VDDA_EBI_1
VDDA_EBI_2
VDDA_EBI_3
VDDA_EBI_4
VDDA_EBI_5
VDDA_EBI_6
VDDA_EBI_7
VDDA_CC_EBI01
VDDA_HV_EBI
VDDA_CSI0_0P9
VDDA_CSI1_0P9
VDDA_CSI2_0P9
VDDA_CSI3_0P9
VDDA_CSI0_1P2
VDDA_CSI1_1P2
VDDA_CSI2_1P2
VDDA_CSI3_1P2
VDDA_DSI0_0P9
VDDA_DSI1_0P9
VDDA_DSI0_1P2
VDDA_DSI1_1P2
VDDA_DSI0_PLL_0P9
VDDA_DSI1_PLL_0P9
VDDA_QREFS_0P9
VDDA_QREFS_1P8
VDDA_QREFS_1P25
VDDA_QLINK_LV_CK
VDDA_QLINK_LV
VDDA_UFS_CORE
VDDA_UFS_1P2
VDDA_USB_SS_DP_1P2
VDDA_USB_SS_DP_CORE
DNC4
DNC5
VDD_USB_HS_CORE
VDDA_USB_HS_1P8
VDDA_USB_HS_3P1
VDDA_WCSS_ADCDAC_1
VDDA_WCSS_ADCDAC_0
VDDA_WCSS_PLL
VDDIO_CK_EBI0
VDDIO_CK_EBI1
VDDIO_EBI_1
VDDIO_EBI_2
VDDIO_EBI_3
VDDIO_EBI_4
VDDIO_EBI_5
VDDIO_EBI_6
VREG_L4A_0P88
VREG_L11A_1P8
VREG_S3A_0P8
VREG_L3C_1P23
VREG_L2C_1P3
VREG_L17A_3P1
VREG_S1A_0P6
VREF_HVPAD_1P25
共用C3822
VSNS_S1A_P
VSNS_S1A_M
W3800
W3801
SHORT
GFX
VREG_S2A_0P85
VSNS_S2A_P
VSNS_S2A_M
W3802
W3803
SILVER APC (PWR CLUSTER)
VREG_S4C_0P75
VSNS_S4C_P
VSNS_S4C_M
W3804
W3805
GOLD APC (PERF CLUSTER)
VREG_S5C_S6C_0P75
VSNS_S5C_S6C_P
VSNS_S5C_S6C_M
W3806
W3807
CX
VREG_S2C_S3C_0P75
VSNS_S2C_S3C_P
VSNS_S2C_S3C_M
W3808
W3809
MX
VREG_S3A_0P8
VSNS_S3A_P
VSNS_S3A_M
W3810
W3811
MODEM
VREG_S7C_0P75
VSNS_S7C_P
VSNS_S7C_M
W3812
W3813
SDM FX_3
VREG_L10A_1P8
LPI (SSC) CX
VREG_L8A_0P8
LPI (SSC) MX
VREG_L7A_0P9
WCSS CX & MX
VREG_L9A_0P8

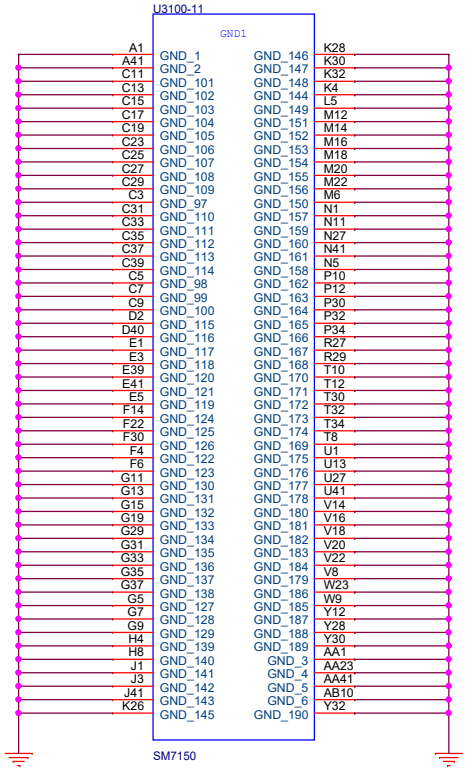
U3100-11
GND1
A1
A41
C11
C13
C15
C17
C19
C23
C25
C27
C29
C3
C31
C33
C35
C37
C39
C5
C7
C9
D2
D40
E1
E3
E39
E41
E5
F14
F22
F30
F4
F6
G11
G13
G15
G19
G29
G31
G33
G35
G37
G5
G7
G9
H4
H8
J1
J3
J41
K26
GND_1
GND_2
GND_101
GND_102
GND_103
GND_104
GND_105
GND_106
GND_107
GND_108
GND_109
GND_97
GND_110
GND_111
GND_112
GND_113
GND_114
GND_98
GND_99
GND_100
GND_115
GND_116
GND_117
GND_118
GND_120
GND_121
GND_119
GND_124
GND_125
GND_126
GND_122
GND_123
GND_130
GND_131
GND_132
GND_133
GND_134
GND_135
GND_136
GND_137
GND_138
GND_127
GND_128
GND_129
GND_139
GND_140
GND_141
GND_142
GND_143
GND_145
GND_146
GND_147
GND_148
GND_144
GND_149
GND_151
GND_152
GND_153
GND_154
GND_155
GND_156
GND_150
GND_157
GND_159
GND_160
GND_161
GND_158
GND_162
GND_163
GND_164
GND_165
GND_166
GND_167
GND_168
GND_170
GND_171
GND_172
GND_173
GND_174
GND_169
GND_175
GND_176
GND_177
GND_178
GND_180
GND_181
GND_182
GND_183
GND_184
GND_179
GND_186
GND_185
GND_187
GND_188
GND_189
GND_3
GND_4
GND_5
GND_6
GND_190
K28
K30
K32
K4
L5
M12
M14
M16
M18
M20
M22
M6
N1
N11
N27
N41
N5
P10
P12
P30
P32
P34
R27
R29
T10
T12
T30
T32
T34
T8
U1
U13
U27
U41
V14
V16
V18
V20
V22
V8
W23
W9
Y12
Y28
Y30
AA1
AA23
AA41
AB10
Y32
SM7150

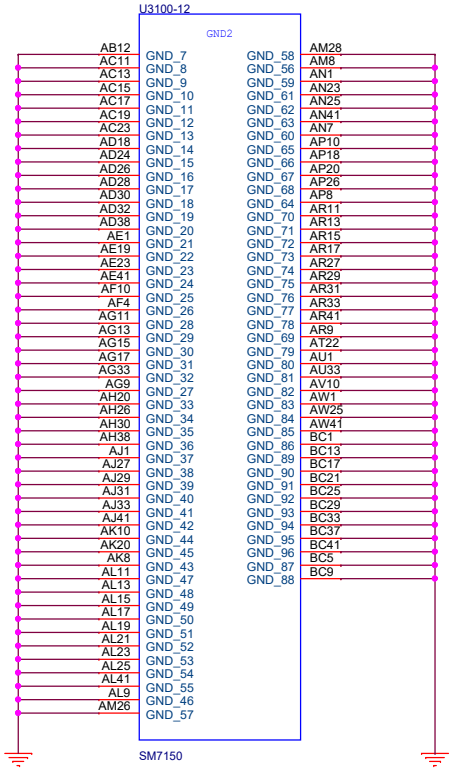
U3100-12
GND2
AB12
AC11
AC13
AC15
AC17
AC19
AC23
AD18
AD24
AD26
AD28
AD30
AD32
AD38
AE1
AE19
AE23
AE41
AF10
AF4
AG11
AG13
AG15
AG17
AG33
AG9
AH20
AH26
AH30
AH38
AJ1
AJ27
AJ29
AJ31
AJ33
AJ41
AK10
AK20
AK8
AL11
AL13
AL15
AL17
AL19
AL21
AL23
AL25
AL41
AL9
AM26
GND_7
GND_8
GND_9
GND_10
GND_11
GND_12
GND_13
GND_14
GND_15
GND_16
GND_17
GND_18
GND_19
GND_20
GND_21
GND_22
GND_23
GND_24
GND_25
GND_26
GND_28
GND_29
GND_30
GND_31
GND_32
GND_27
GND_33
GND_34
GND_35
GND_36
GND_37
GND_38
GND_39
GND_40
GND_41
GND_42
GND_44
GND_45
GND_43
GND_47
GND_48
GND_49
GND_50
GND_51
GND_52
GND_53
GND_54
GND_55
GND_46
GND_57
GND_58
GND_56
GND_59
GND_61
GND_62
GND_63
GND_60
GND_65
GND_66
GND_67
GND_68
GND_64
GND_70
GND_71
GND_72
GND_73
GND_74
GND_75
GND_76
GND_77
GND_78
GND_69
GND_79
GND_80
GND_81
GND_82
GND_83
GND_84
GND_85
GND_86
GND_89
GND_90
GND_91
GND_92
GND_93
GND_94
GND_95
GND_96
GND_87
GND_88
AM28
AM8
AN1
AN23
AN25
AN41
AN7
AP10
AP18
AP20
AP26
AP8
AR11
AR13
AR15
AR17
AR27
AR29
AR31
AR33
AR41
AR9
AT22
AU1
AU33
AV10
AW1
AW25
AW41
BC1
BC13
BC17
BC21
BC25
BC29
BC33
BC37
BC41
BC5
BC9
SM7150

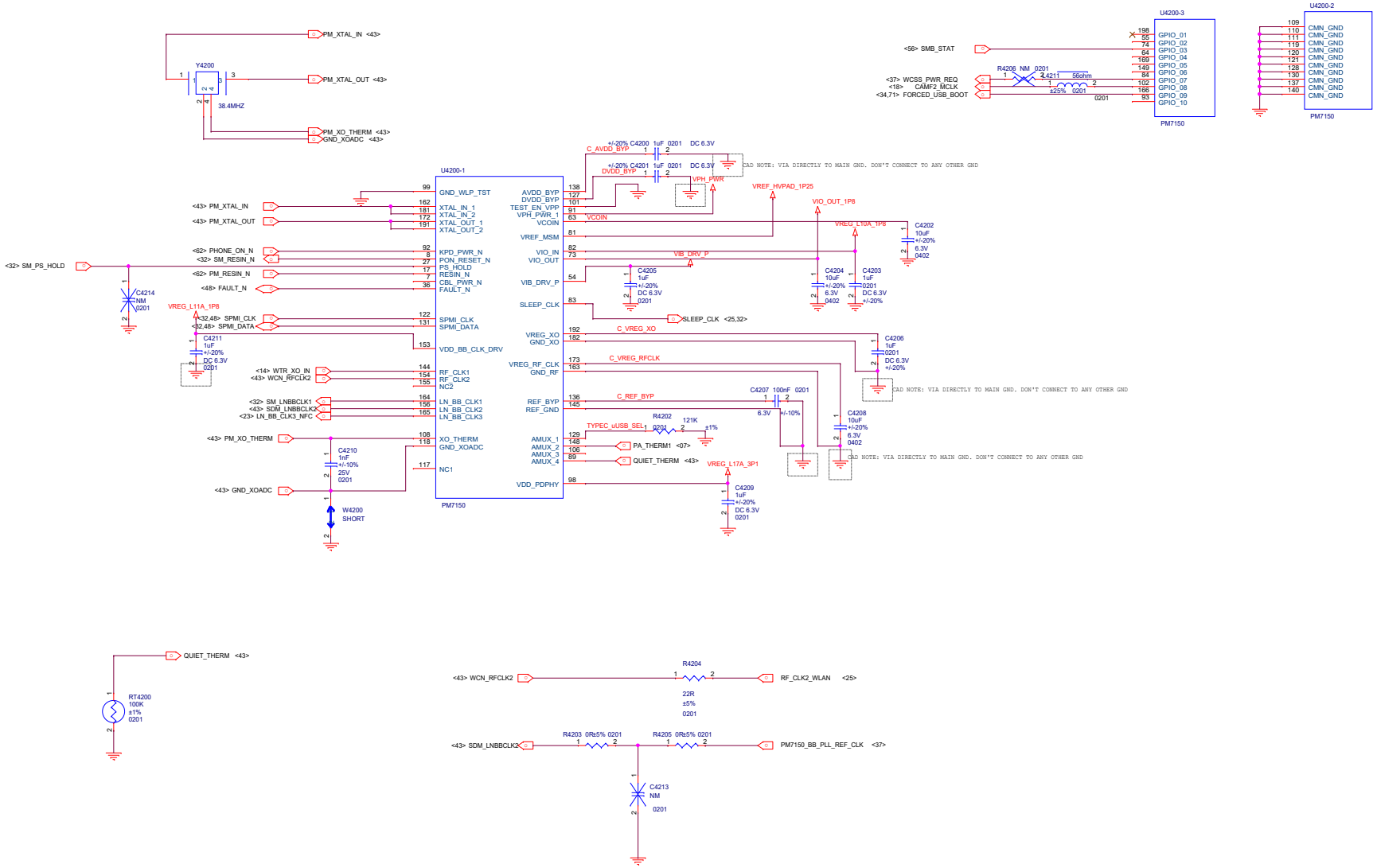
U4200-1
PM7150
GND_WLP_TST
XTAL_IN_1
XTAL_IN_2
XTAL_OUT_1
XTAL_OUT_2
KPD_PWR_N
PON_RESET_N
PS_HOLD
RESIN_N
CBL_PWR_N
FAULT_N
SPMI_CLK
SPMI_DATA
VDD_BB_CLK_DRV
RF_CLK1
RF_CLK2
NC2
LN_BB_CLK1
LN_BB_CLK2
LN_BB_CLK3
XO_THERM
GND_XOADC
NC1
AVDD_BYP
DVDD_BYP
TEST_EN_VPP
VPH_PWR_1
VCOIN
VREF_MSM
VIO_IN
VIO_OUT
VIB_DRV_P
SLEEP_CLK
VREG_XO
GND_XO
VREG_RF_CLK
GND_RF
REF_BYP
REF_GND
AMUX_1
AMUX_2
AMUX_3
AMUX_4
VDD_PDPHY
U4200-3
PM7150
GPIO_01
GPIO_02
GPIO_03
GPIO_04
GPIO_05
GPIO_06
GPIO_07
GPIO_08
GPIO_09
GPIO_10
U4200-2
PM7150
CMN_GND
Y4200
38.4MHZ
PM_XTAL_IN <43>
PM_XTAL_OUT <43>
PM_XO_THERM <43>
GND_XOADC <43>
<43> PM_XTAL_IN
<43> PM_XTAL_OUT
<32> SM_PS_HOLD
<62> PHONE_ON_N
<32> SM_RESIN_N
<62> PM_RESIN_N
<48> FAULT_N
<32,48> SPMI_CLK
<32,48> SPMI_DATA
<14> WTR_XO_IN
<43> WCN_RFCLK2
<32> SM_LNBBCLK1
<43> SDM_LNBBCLK2
<23> LN_BB_CLK3_NFC
<43> PM_XO_THERM
<43> GND_XOADC
<56> SMB_STAT
<37> WCSS_PWR_REQ
<18> CAMF2_MCLK
<34,71> FORCED_USB_BOOT
PA_THERM1 <07>
QUIET_THERM <43>
SLEEP_CLK <25,32>
C_AVDD_BYP
DVDD_BYP
VPH_PWR
VREF_HVPAD_1P25
VIO_OUT_1P8
VREG_L10A_1P8
VIB_DRV_P
C_VREG_XO
C_VREG_RFCLK
C_REF_BYP
TYPEC_uUSB_SEL
VREG_L11A_1P8
VREG_L17A_3P1
CAD NOTE: VIA DIRECTLY TO MAIN GND. DON'T CONNECT TO ANY OTHER GND
C4200 1uF 0201 DC 6.3V
C4201 1uF 0201 DC 6.3V
C4202 10uF 6.3V 0402
C4203 1uF 0201 DC 6.3V
C4204 10uF 6.3V 0402
C4205 1uF DC 6.3V 0201
C4206 1uF 0201 DC 6.3V
C4207 100nF 0201 6.3V
C4208 10uF 6.3V 0402
C4209 1uF DC 6.3V 0201
C4210 1nF 25V 0201
C4211 1uF DC 6.3V 0201
C4214 NM 0201
R4202 200K 121K
R4206 NM 0201
2.4211 56ohm
W4200 SHORT
RT4200 100K ±1% 0201
R4204 22R ±5% 0201
R4203 0R±5% 0201
R4205 0R±5% 0201
C4213 NM 0201
<43> WCN_RFCLK2
RF_CLK2_WLAN <25>
<43> SDM_LNBBCLK2
PM7150_BB_PLL_REF_CLK <37>

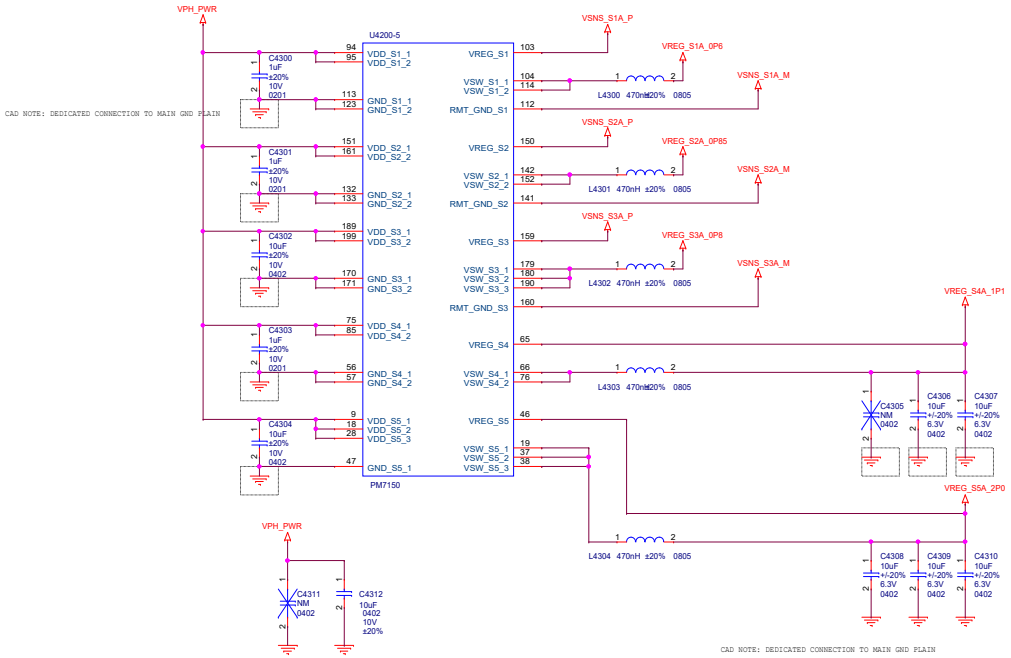
VPH_PWR
U4200-5
PM7150
CAD NOTE: DEDICATED CONNECTION TO MAIN GND PLAIN
C4300 1uF ±20% 10V 0201
C4301 1uF ±20% 10V 0201
C4302 10uF ±20% 10V 0402
C4303 1uF ±20% 10V 0201
C4304 10uF ±20% 10V 0402
94 VDD_S1_1
95 VDD_S1_2
113 GND_S1_1
123 GND_S1_2
151 VDD_S2_1
161 VDD_S2_2
132 GND_S2_1
133 GND_S2_2
189 VDD_S3_1
199 VDD_S3_2
170 GND_S3_1
171 GND_S3_2
75 VDD_S4_1
85 VDD_S4_2
56 GND_S4_1
57 GND_S4_2
9 VDD_S5_1
18 VDD_S5_2
28 VDD_S5_3
47 GND_S5_1
VREG_S1 103
VSW_S1_1 104
VSW_S1_2 114
RMT_GND_S1 112
VREG_S2 150
VSW_S2_1 142
VSW_S2_2 152
RMT_GND_S2 141
VREG_S3 159
VSW_S3_1 179
VSW_S3_2 180
VSW_S3_3 190
RMT_GND_S3 160
VREG_S4 65
VSW_S4_1 66
VSW_S4_2 76
VREG_S5 46
VSW_S5_1 19
VSW_S5_2 37
VSW_S5_3 38
VSNS_S1A_P
VREG_S1A_0P6
VSNS_S1A_M
L4300 470nH ±20% 0805
VSNS_S2A_P
VREG_S2A_0P85
VSNS_S2A_M
L4301 470nH ±20% 0805
VSNS_S3A_P
VREG_S3A_0P8
VSNS_S3A_M
L4302 470nH ±20% 0805
L4303 470nH ±20% 0805
L4304 470nH ±20% 0805
VREG_S4A_1P1
C4305 NM 0402
C4306 10uF +/-20% 6.3V 0402
C4307 10uF +/-20% 6.3V 0402
VREG_S5A_2P0
C4308 10uF +/-20% 6.3V 0402
C4309 10uF +/-20% 6.3V 0402
C4310 10uF +/-20% 6.3V 0402
VPH_PWR
C4311 NM 0402
C4312 10uF 0402 10V ±20%
CAD NOTE: DEDICATED CONNECTION TO MAIN GND PLAIN

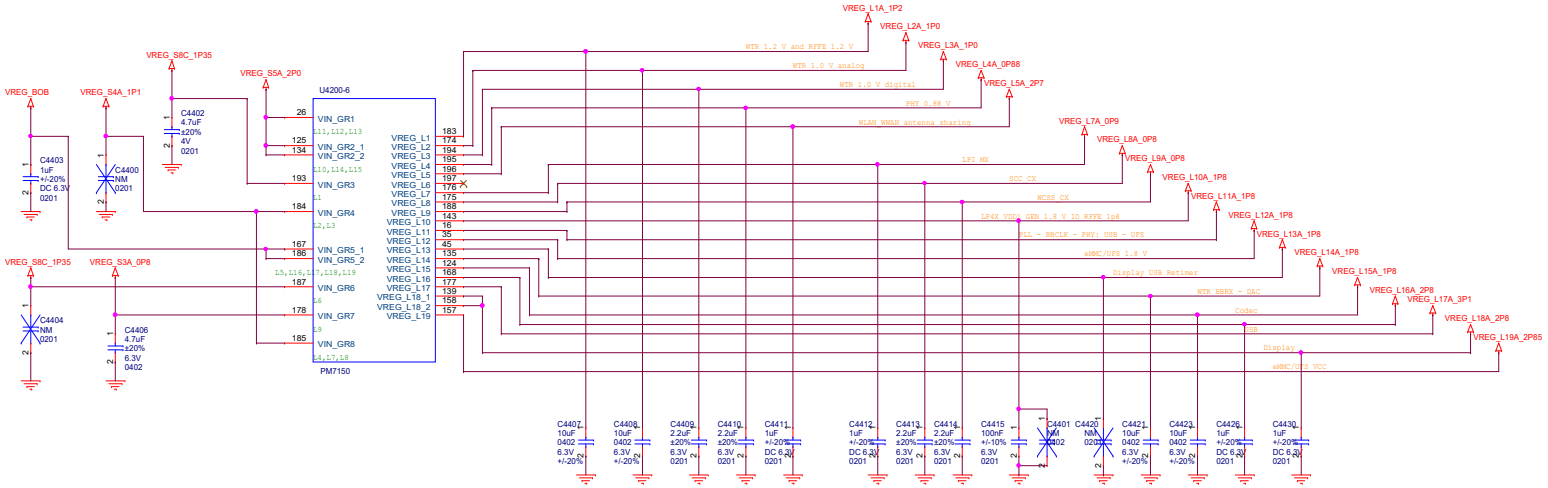

VREG_L11A_1P8预留电容删除　　高度限制，10uf拆成2个4.7uf

PSEUDO CAPLESS LDOs
For CAPLESS LDOs: If decaps on the load side do not
add up to LDO spec, then install the cap close to the PMIC

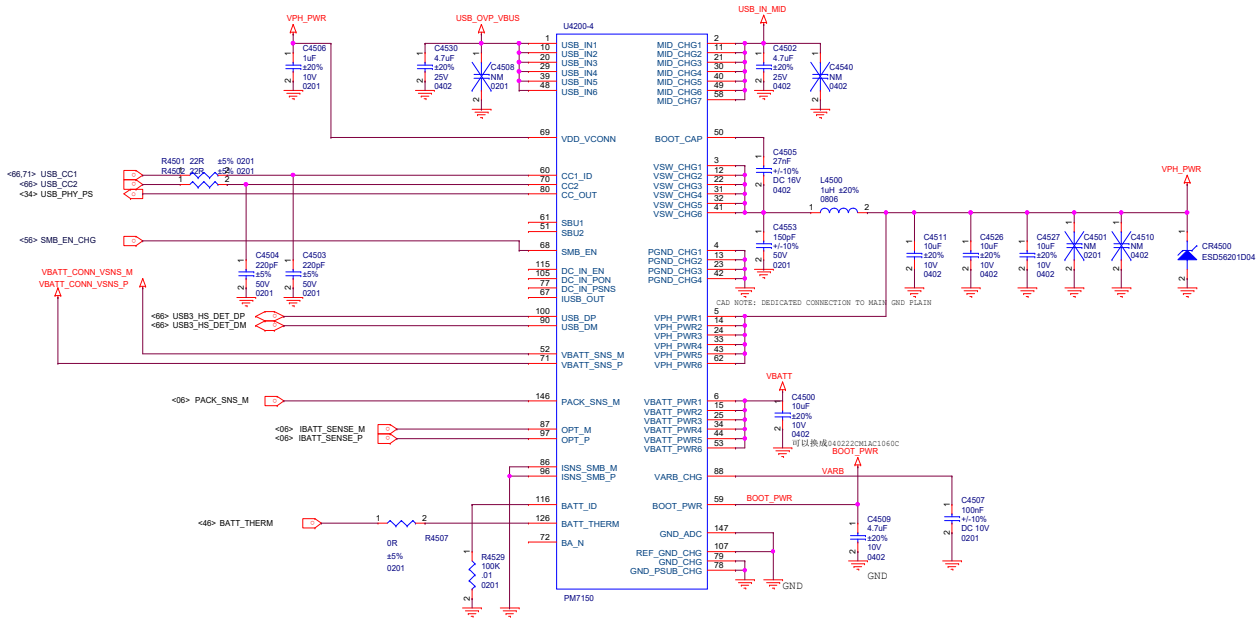
U4200-4
PM7150
VPH_PWR
USB_OVP_VBUS
USB_IN_MID
C4506 1uF ±20% 10V 0201
C4530 4.7uF ±20% 25V 0402
C4508 NM 0201
C4502 4.7uF ±20% 25V 0402
C4540 NM 0402
USB_IN1
USB_IN2
USB_IN3
USB_IN4
USB_IN5
USB_IN6
MID_CHG1
MID_CHG2
MID_CHG3
MID_CHG4
MID_CHG5
MID_CHG6
MID_CHG7
VDD_VCONN
BOOT_CAP
C4505 27nF +/-10% DC 16V 0402
L4500 1uH ±20% 0806
R4501 22R ±5% 0201
R4502 22R ±5% 0201
<68,71> USB_CC1
<66> USB_CC2
<34> USB_PHY_PS
CC1_ID
CC2
CC_OUT
VSW_CHG1
VSW_CHG2
VSW_CHG3
VSW_CHG4
VSW_CHG5
VSW_CHG6
SBU1
SBU2
<56> SMB_EN_CHG
SMB_EN
C4553 150pF +/-10% 50V 0201
C4511 10uF ±20% 10V 0402
C4526 10uF ±20% 10V 0402
C4527 10uF ±20% 10V 0402
C4501 NM 0201
C4510 NM 0402
CR4500 ESD56201D04
C4504 220pF ±5% 50V 0201
C4503 220pF ±5% 50V 0201
VBATT_CONN_VSNS_M
VBATT_CONN_VSNS_P
DC_IN_EN
DC_IN_PON
DC_IN_PSNS
IUSB_OUT
PGND_CHG1
PGND_CHG2
PGND_CHG3
PGND_CHG4
CAD NOTE: DEDICATED CONNECTION TO MAIN GND PLAIN
<66> USB3_HS_DET_DP
<66> USB3_HS_DET_DM
USB_DP
USB_DM
VPH_PWR1
VPH_PWR2
VPH_PWR3
VPH_PWR4
VPH_PWR5
VPH_PWR6
VBATT_SNS_M
VBATT_SNS_P
VBATT
C4500 10uF ±20% 10V 0402
可以换成040222CM1AC1060C
<06> PACK_SNS_M
PACK_SNS_M
VBATT_PWR1
VBATT_PWR2
VBATT_PWR3
VBATT_PWR4
VBATT_PWR5
VBATT_PWR6
<06> IBATT_SENSE_M
<06> IBATT_SENSE_P
OPT_M
OPT_P
ISNS_SMB_M
ISNS_SMB_P
VARB_CHG
VARB
BOOT_PWR
C4507 100nF +/-10% DC 10V 0201
C4509 4.7uF ±20% 10V 0402
<46> BATT_THERM
BATT_ID
BATT_THERM
BOOT_PWR
R4507 0R ±5% 0201
R4529 100K .01 0201
BA_N
GND_ADC
REF_GND_CHG
GND_CHG
GND_PSUB_CHG
GND

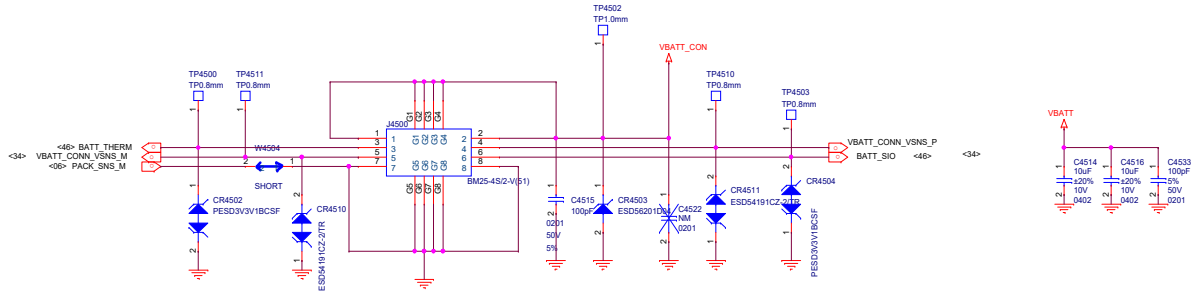
TP4502 TP1.0mm
VBATT_CON
TP4500 TP0.8mm
TP4511 TP0.8mm
TP4510 TP0.8mm
TP4503 TP0.8mm
J4500
BM25-4S/2-V(51)
<46> BATT_THERM
<34> VBATT_CONN_VSNS_M
<06> PACK_SNS_M
W4504
SHORT
VBATT_CONN_VSNS_P
BATT_SIO <46>
<34>
CR4502 PESD3V3V1BCSF
CR4510 ESD54191CZ-2/TR
C4515 100pF
CR4503 ESD56201D04
C4522 NM 0201
CR4511 ESD54191CZ-2/TR
CR4504 PESD3V3V1BCSF
VBATT
C4514 10uF ±20% 10V 0402
C4516 10uF ±20% 10V 0402
C4533 100pF ±5% 50V 0201

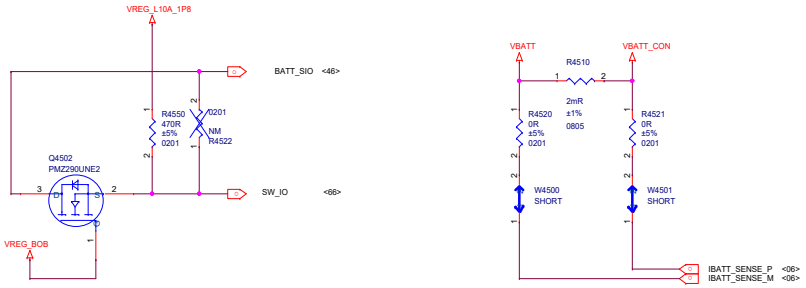
VREG_L10A_1P8
BATT_SIO <46>
R4550 470R ±5% 0201
0201
NM R4522
Q4502 PMZ290UNE2
SW_IO <66>
VREG_BOB

VBATT
VBATT_CON
R4510 2mR ±1% 0805
R4520 0R ±5% 0201
R4521 0R ±5% 0201
W4500 SHORT
W4501 SHORT
IBATT_SENSE_P <06>
IBATT_SENSE_M <06>

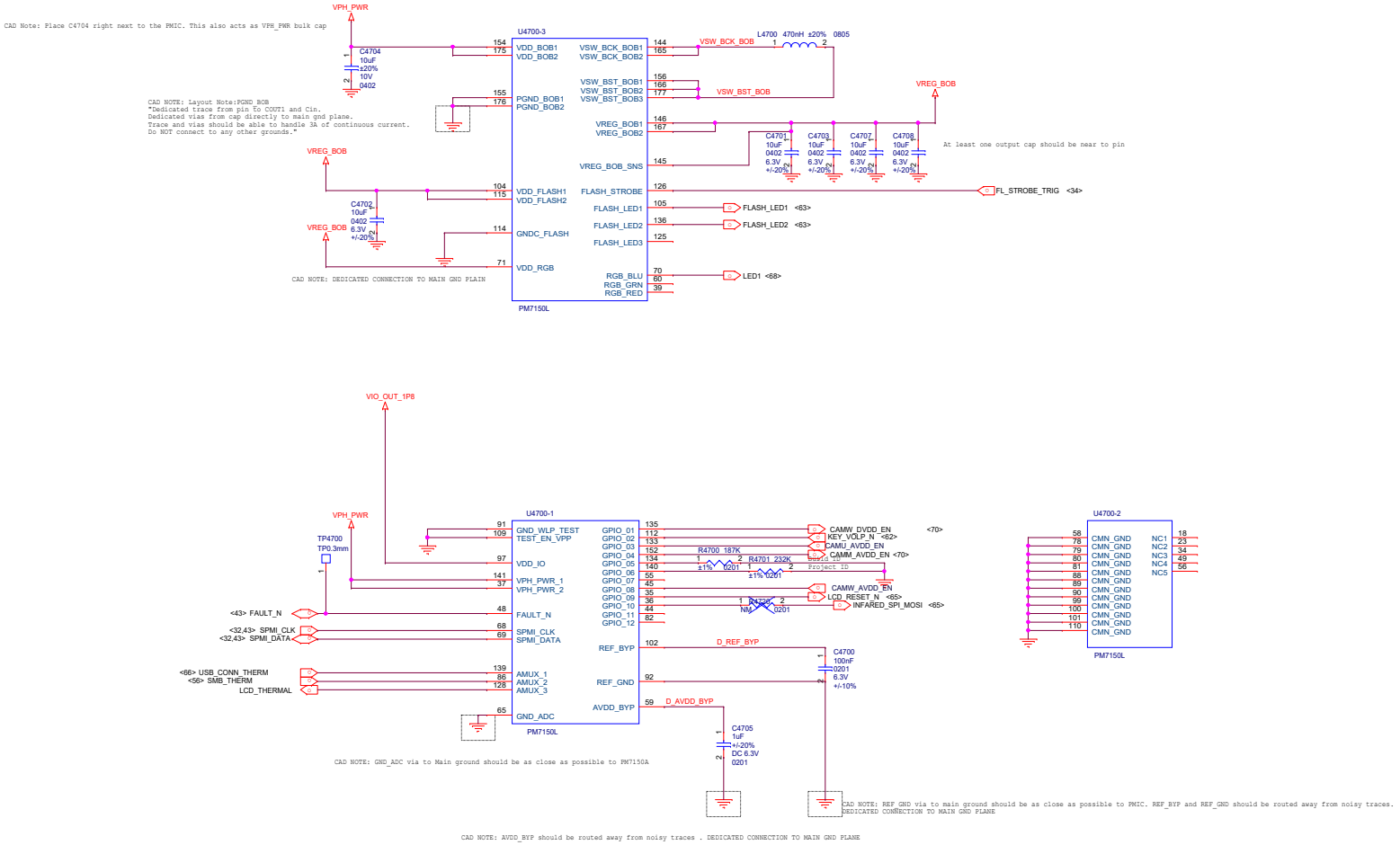
VPH_PWR
CAD Note: Place C4704 right next to the PMIC. This also acts as VPH_PWR bulk cap
C4704 10uF ±20% 10V 0402
U4700-3
VDD_BOB1 VDD_BOB2
VSW_BCK_BOB1 VSW_BCK_BOB2
VSW_BCK_BOB
L4700 470nH ±20% 0805
VSW_BST_BOB1 VSW_BST_BOB2 VSW_BST_BOB3
VSW_BST_BOB
VREG_BOB
CAD NOTE: Layout Note:PGND_BOB
"Dedicated trace from pin to COUT1 and Cin.
Dedicated vias from cap directly to main gnd plane.
Trace and vias should be able to handle 3A of continuous current.
Do NOT connect to any other grounds."
PGND_BOB1 PGND_BOB2
VREG_BOB1 VREG_BOB2
VREG_BOB_SNS
C4701 10uF 0402 6.3V +/-20%
C4703 10uF 0402 6.3V +/-20%
C4707 10uF 0402 6.3V +/-20%
C4708 10uF 0402 6.3V +/-20%
At least one output cap should be near to pin
VREG_BOB
C4702 10uF 0402 6.3V +/-20%
VDD_FLASH1 VDD_FLASH2
FLASH_STROBE
FL_STROBE_TRIG <34>
FLASH_LED1
FLASH_LED1 <63>
FLASH_LED2
FLASH_LED2 <63>
GNDC_FLASH
FLASH_LED3
VDD_RGB
CAD NOTE: DEDICATED CONNECTION TO MAIN GND PLAIN
RGB_BLU RGB_GRN RGB_RED
LED1 <68>
PM7150L
VIO_OUT_1P8
VPH_PWR
TP4700 TP0.3mm
U4700-1
GND_WLP_TEST TEST_EN_VPP
VDD_IO
VPH_PWR_1 VPH_PWR_2
<43> FAULT_N
FAULT_N
<32,43> SPMI_CLK
<32,43> SPMI_DATA
SPMI_CLK SPMI_DATA
GPIO_01 GPIO_02 GPIO_03 GPIO_04 GPIO_05 GPIO_06 GPIO_07 GPIO_08 GPIO_09 GPIO_10 GPIO_11 GPIO_12
CAMW_DVDD_EN <70>
KEY_VOLP_N <62>
CAMU_AVDD_EN
CAMM_AVDD_EN <70>
R4700 187K ±1% 0201
R4701 232K ±1% 0201
Project ID
CAMW_AVDD_EN
LCD_RESET_N <65>
INFARED_SPI_MOSI <65>
R4702 NM 0201
REF_BYP
D_REF_BYP
C4700 100nF 0201 6.3V +/-10%
<66> USB_CONN_THERM
<56> SMB_THERM
LCD_THERMAL
AMUX_1 AMUX_2 AMUX_3
REF_GND
AVDD_BYP
D_AVDD_BYP
GND_ADC
PM7150L
C4705 1uF +/-20% DC 6.3V 0201
CAD NOTE: GND_ADC via to Main ground should be as close as possible to PM7150A
CAD NOTE: REF GND via to main ground should be as close as possible to PMIC. REF_BYP and REF_GND should be routed away from noisy traces.
DEDICATED CONNECTION TO MAIN GND PLANE
CAD NOTE: AVDD_BYP should be routed away from noisy traces . DEDICATED CONNECTION TO MAIN GND PLANE
U4700-2
CMN_GND
NC1 NC2 NC3 NC4 NC5
PM7150L

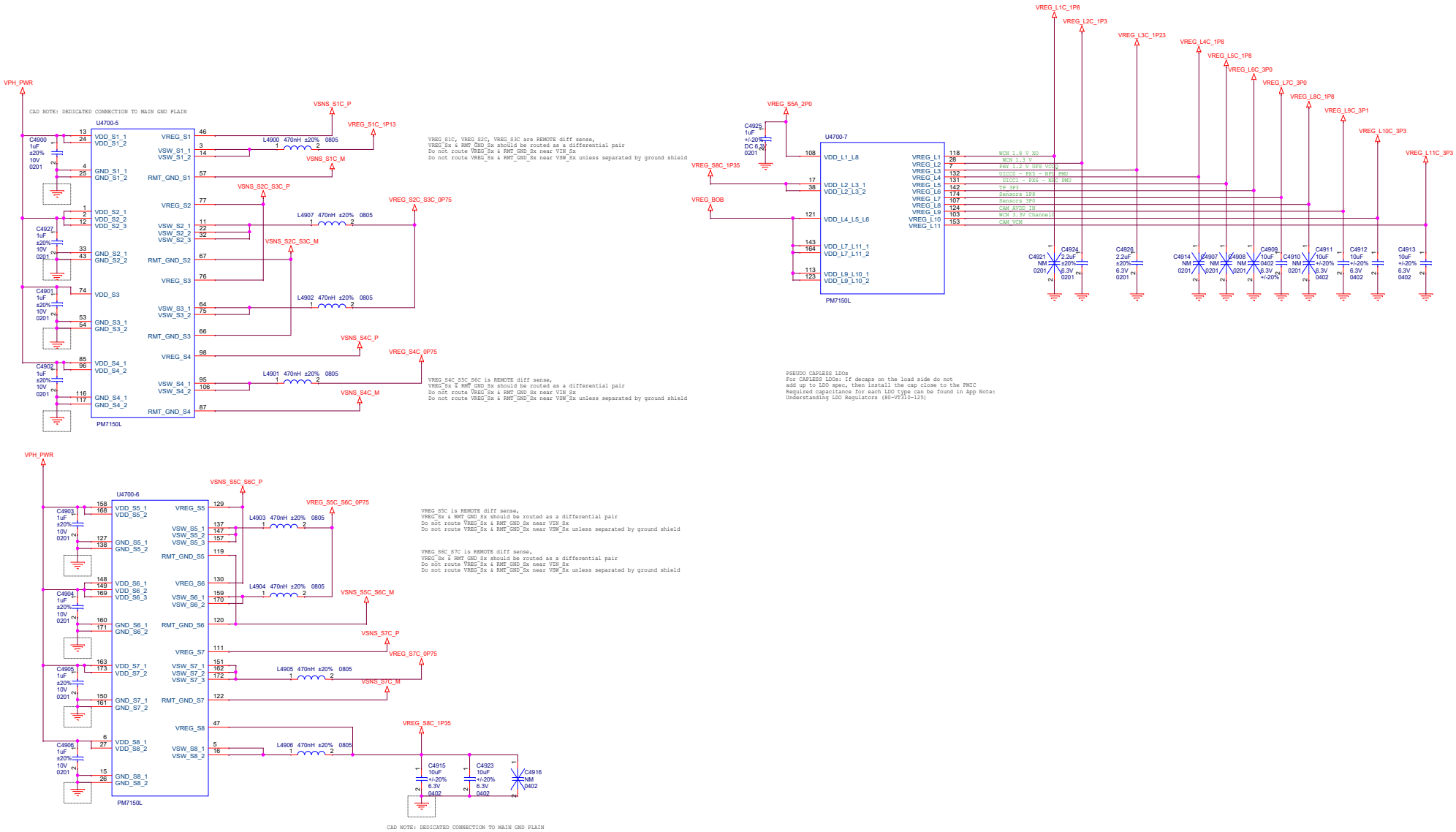
VPH_PWR
CAD NOTE: DEDICATED CONNECTION TO MAIN GND PLAIN
U4700-5
PM7150L
VSNS_S1C_P
VREG_S1C_1P13
L4900 470nH ±20% 0805
VSNS_S1C_M
VSNS_S2C_S3C_P
VREG_S2C_S3C_0P75
L4907 470nH ±20% 0805
VSNS_S2C_S3C_M
L4902 470nH ±20% 0805
VSNS_S4C_P
VREG_S4C_0P75
L4901 470nH ±20% 0805
VSNS_S4C_M
VREG_S1C, VREG_S2C, VREG_S3C are REMOTE diff sense,
VREG_Sx & RMT_GND_Sx should be routed as a differential pair
Do not route VREG_Sx & RMT_GND_Sx near VIN_Sx
Do not route VREG_Sx & RMT_GND_Sx near VSW_Sx unless separated by ground shield
VREG_S4C_S5C_S6C is REMOTE diff sense,
VREG_Sx & RMT_GND_Sx should be routed as a differential pair
Do not route VREG_Sx & RMT_GND_Sx near VIN_Sx
Do not route VREG_Sx & RMT_GND_Sx near VSW_Sx unless separated by ground shield
VREG_S5A_2P0
VREG_S8C_1P35
VREG_BOB
U4700-7
PM7150L
VREG_L1C_1P8
VREG_L2C_1P3
VREG_L3C_1P23
VREG_L4C_1P8
VREG_L5C_1P8
VREG_L6C_3P0
VREG_L7C_3P0
VREG_L8C_1P8
VREG_L9C_3P1
VREG_L10C_3P3
VREG_L11C_3P3
WCN 1.8 V XO
WCN 1.3 V
PWR 1.2 V UFS VCCQ
UICC0 - PX5 - NFC PMU
UICC1 - PX6 - NFC PMU
TP 3P3
Sensors 1P8
Sensors 3P0
CAM AVDD IN
WCN 3.3V Channel1
CAM VCM
PSEUDO CAPLESS LDOs
For CAPLESS LDOs: If decaps on the load side do not
add up to LDO spec, then install the cap close to the PMIC
Required capacitance for each LDO type can be found in App Note:
Understanding LDO Regulators (80-V7310-125)
U4700-6
PM7150L
VSNS_S5C_S6C_P
VREG_S5C_S6C_0P75
L4903 470nH ±20% 0805
L4904 470nH ±20% 0805
VSNS_S5C_S6C_M
VSNS_S7C_P
VREG_S7C_0P75
L4905 470nH ±20% 0805
VSNS_S7C_M
L4906 470nH ±20% 0805
VREG_S5C, S6C is REMOTE diff sense,
VREG_Sx & RMT_GND_Sx should be routed as a differential pair
Do not route VREG_Sx & RMT_GND_Sx near VIN_Sx
Do not route VREG_Sx & RMT_GND_Sx near VSW_Sx unless separated by ground shield
VREG_S6C, S7C is REMOTE diff sense,
VREG_Sx & RMT_GND_Sx should be routed as a differential pair
Do not route VREG_Sx & RMT_GND_Sx near VIN_Sx
Do not route VREG_Sx & RMT_GND_Sx near VSW_Sx unless separated by ground shield
VREG_S8C_1P35
C4915 10uF +/-20% 6.3V 0402
C4923 10uF +/-20% 6.3V 0402
C4916 NM 0402
CAD NOTE: DEDICATED CONNECTION TO MAIN GND PLAIN
VPH_PWR BULK CAPS.
DISTRIBUTE THESE ALL OVER PML
VPH_PWR
C4917 NM 0402
C4918 NM 0402

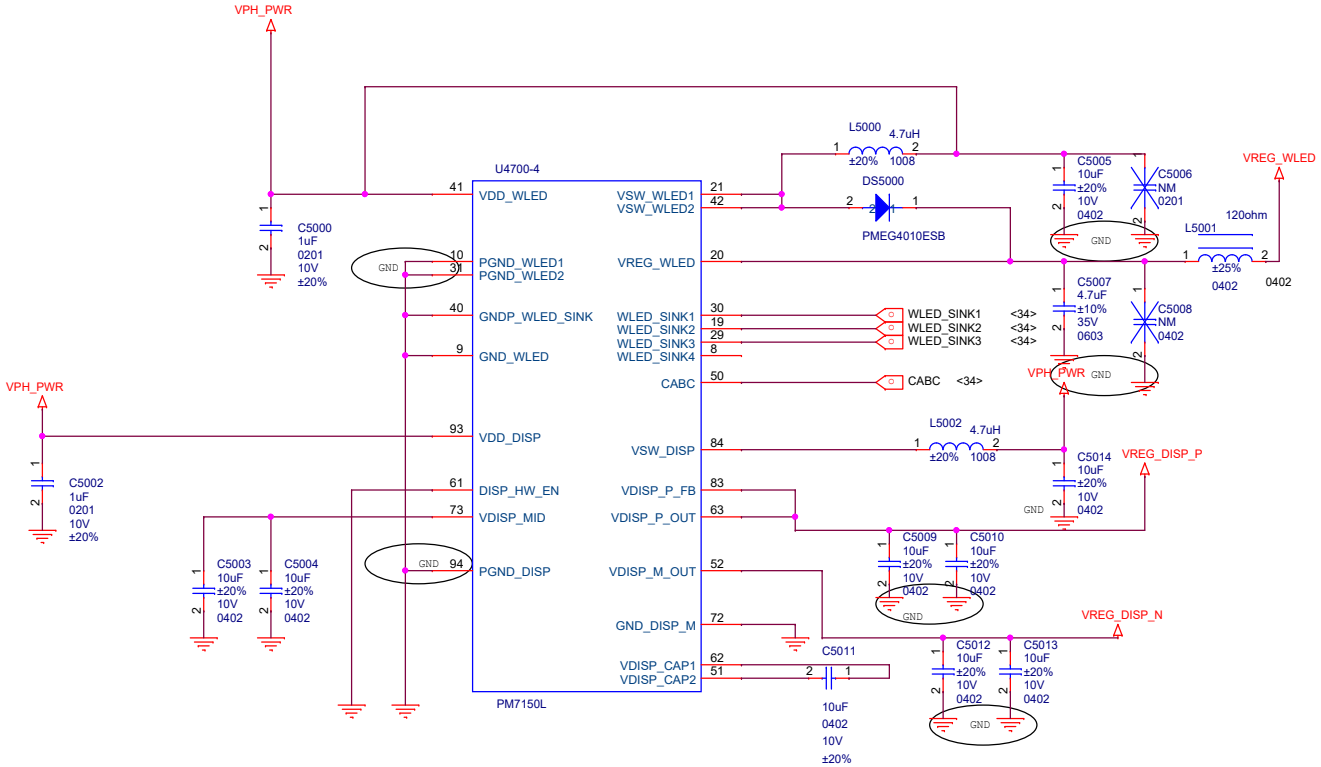

C5011 SHOULD BE CLOSE TO PINS AS POSSIBLE

SMB1390

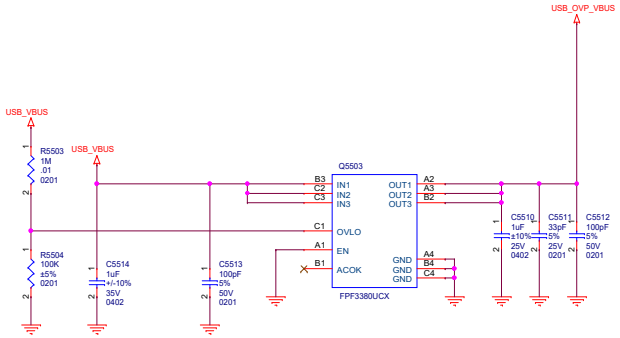
USB_OVP_VBUS
USB_VBUS
USB_VBUS
R5503
1M
.01
0201
R5504
100K
±5%
0201
C5514
1uF
+/-10%
35V
0402
C5513
100pF
5%
50V
0201
Q5503
B3
C2
C3
IN1
IN2
IN3
OUT1
OUT2
OUT3
A2
A3
B2
C1
OVLO
A1
EN
B1
ACOK
GND
GND
GND
A4
B4
C4
FPF3380UCX
C5510
1uF
±10%
25V
0402
C5511
33pF
5%
25V
0201
C5512
100pF
5%
50V
0201

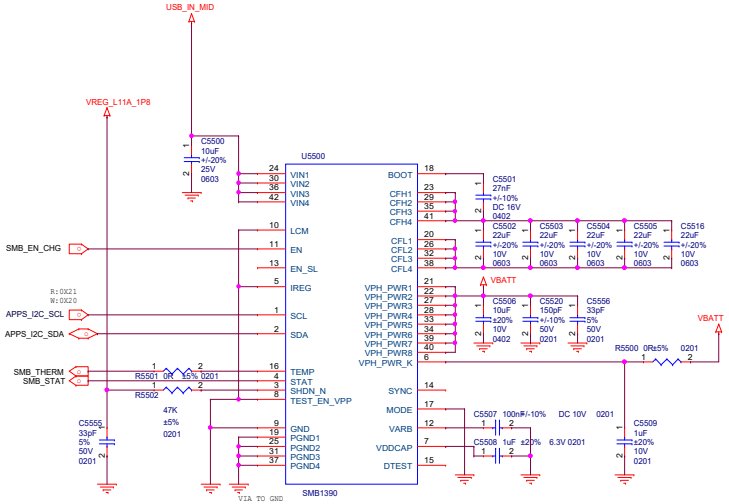
USB_IN_MID
VREG_L11A_1P8
C5500
10uF
+/-20%
25V
0603
U5500
VIN1
VIN2
VIN3
VIN4
LCM
EN
EN_SL
IREG
SCL
SDA
TEMP
STAT
SHDN_N
TEST_EN_VPP
GND
PGND1
PGND2
PGND3
PGND4
BOOT
CFH1
CFH2
CFH3
CFH4
CFL1
CFL2
CFL3
CFL4
VPH_PWR1
VPH_PWR2
VPH_PWR3
VPH_PWR4
VPH_PWR5
VPH_PWR6
VPH_PWR7
VPH_PWR8
VPH_PWR_K
SYNC
MODE
VARB
VDDCAP
DTEST
SMB1390
SMB_EN_CHG
R:0X21
W:0X20
APPS_I2C_SCL
APPS_I2C_SDA
SMB_THERM
SMB_STAT
R5501 0R ±5% 0201
R5502
47K
±5%
0201
C5555
33pF
5%
50V
0201
VIA TO GND
C5501
27nF
+/-10%
DC 16V
0402
C5502
22uF
+/-20%
10V
0603
C5503
22uF
+/-20%
10V
0603
C5504
22uF
+/-20%
10V
0603
C5505
22uF
+/-20%
10V
0603
C5516
22uF
+/-20%
10V
0603
VBATT
C5506
10uF
±20%
10V
0402
C5520
150pF
+/-10%
50V
0201
C5556
33pF
5%
50V
0201
VBATT
R5500 0R±5% 0201
C5507 100nF +/-10% DC 10V 0201
C5508 1uF ±20% 6.3V 0201
C5509
1uF
±20%
10V
0201

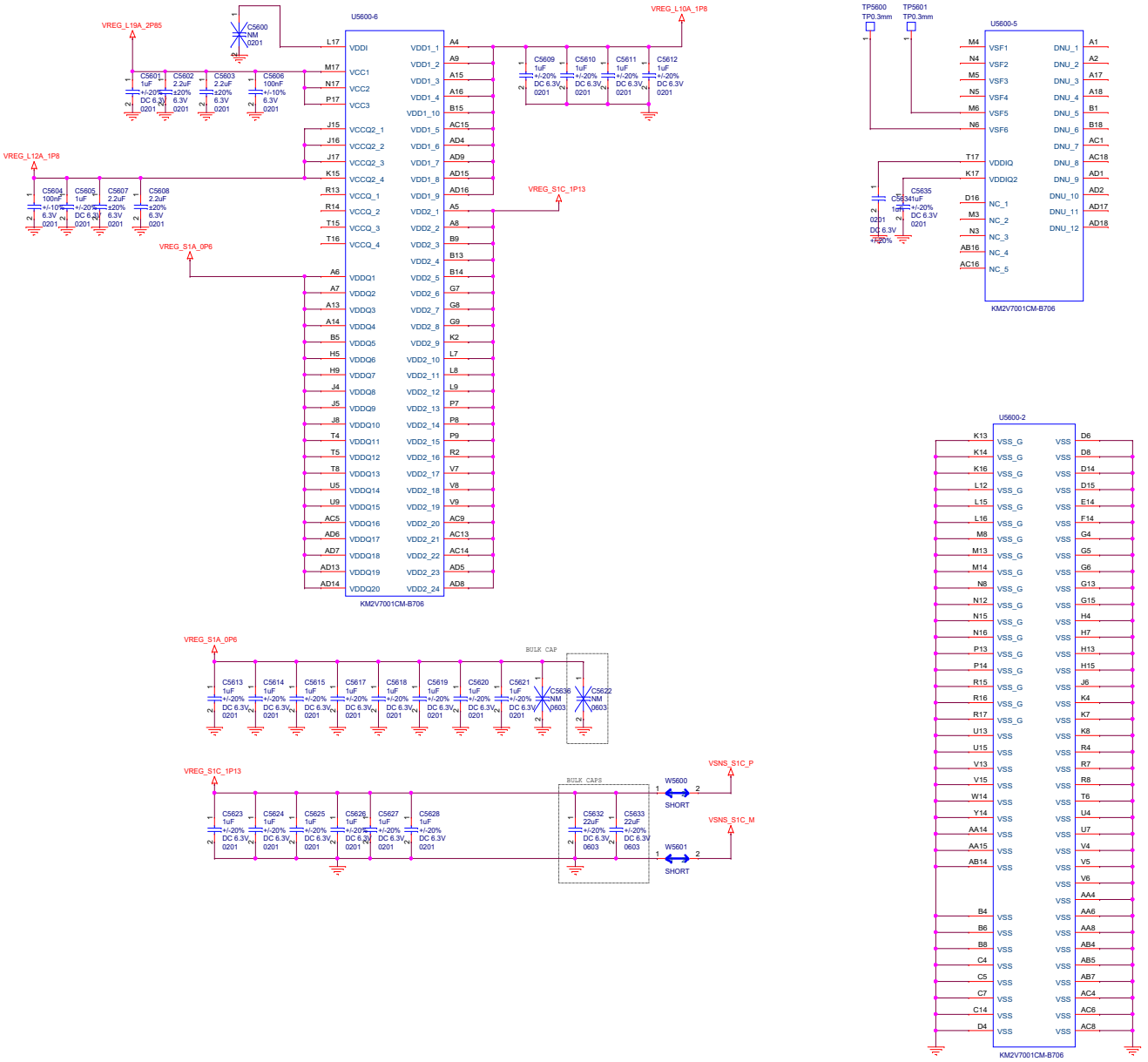
U5600-6
KM2V7001CM-B706
VREG_L19A_2P85
VREG_L10A_1P8
VREG_L12A_1P8
VREG_S1C_1P13
VREG_S1A_0P6
C5600 NM 0201
C5601 1uF +/-20% DC 6.3V 0201
C5602 2.2uF ±20% 6.3V 0201
C5603 2.2uF ±20% 6.3V 0201
C5606 100nF +/-10% 6.3V 0201
C5604 100nF +/-10% 6.3V 0201
C5605 1uF +/-20% DC 6.3V 0201
C5607 2.2uF ±20% 6.3V 0201
C5608 2.2uF ±20% 6.3V 0201
C5609 1uF +/-20% DC 6.3V 0201
C5610 1uF +/-20% DC 6.3V 0201
C5611 1uF +/-20% DC 6.3V 0201
C5612 1uF +/-20% DC 6.3V 0201
VDDI
VCC1
VCC2
VCC3
VCCQ2_1
VCCQ2_2
VCCQ2_3
VCCQ2_4
VCCQ_1
VCCQ_2
VCCQ_3
VCCQ_4
VDDQ1
VDDQ2
VDDQ3
VDDQ4
VDDQ5
VDDQ6
VDDQ7
VDDQ8
VDDQ9
VDDQ10
VDDQ11
VDDQ12
VDDQ13
VDDQ14
VDDQ15
VDDQ16
VDDQ17
VDDQ18
VDDQ19
VDDQ20
VDD1_1
VDD1_2
VDD1_3
VDD1_4
VDD1_10
VDD1_5
VDD1_6
VDD1_7
VDD1_8
VDD1_9
VDD2_1
VDD2_2
VDD2_3
VDD2_4
VDD2_5
VDD2_6
VDD2_7
VDD2_8
VDD2_9
VDD2_10
VDD2_11
VDD2_12
VDD2_13
VDD2_14
VDD2_15
VDD2_16
VDD2_17
VDD2_18
VDD2_19
VDD2_20
VDD2_21
VDD2_22
VDD2_23
VDD2_24
TP5600 TP0.3mm
TP5601 TP0.3mm
U5600-5
KM2V7001CM-B706
VSF1
VSF2
VSF3
VSF4
VSF5
VSF6
VDDIQ
VDDIQ2
NC_1
NC_2
NC_3
NC_4
NC_5
DNU_1
DNU_2
DNU_3
DNU_4
DNU_5
DNU_6
DNU_7
DNU_8
DNU_9
DNU_10
DNU_11
DNU_12
C5635 1uF +/-20% DC 6.3V 0201
C5636 1uF +/-20% DC 6.3V 0201
U5600-2
KM2V7001CM-B706
VSS_G
VSS
VREG_S1A_0P6
BULK CAP
C5613 1uF +/-20% DC 6.3V 0201
C5614 1uF +/-20% DC 6.3V 0201
C5615 1uF +/-20% DC 6.3V 0201
C5617 1uF +/-20% DC 6.3V 0201
C5618 1uF +/-20% DC 6.3V 0201
C5619 1uF +/-20% DC 6.3V 0201
C5620 1uF +/-20% DC 6.3V 0201
C5621 1uF +/-20% DC 6.3V 0201
C5636 NM 0603
C5622 NM 0603
VREG_S1C_1P13
BULK CAPS
VSNS_S1C_P
VSNS_S1C_M
W5600 SHORT
W5601 SHORT
C5623 1uF +/-20% DC 6.3V 0201
C5624 1uF +/-20% DC 6.3V 0201
C5625 1uF +/-20% DC 6.3V 0201
C5626 1uF +/-20% DC 6.3V 0201
C5627 1uF +/-20% DC 6.3V 0201
C5628 1uF +/-20% DC 6.3V 0201
C5632 22uF +/-20% DC 6.3V 0603
C5633 22uF +/-20% DC 6.3V 0603

eMMC

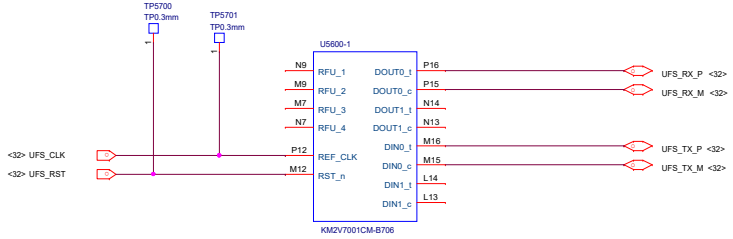

LPDDR4/4x

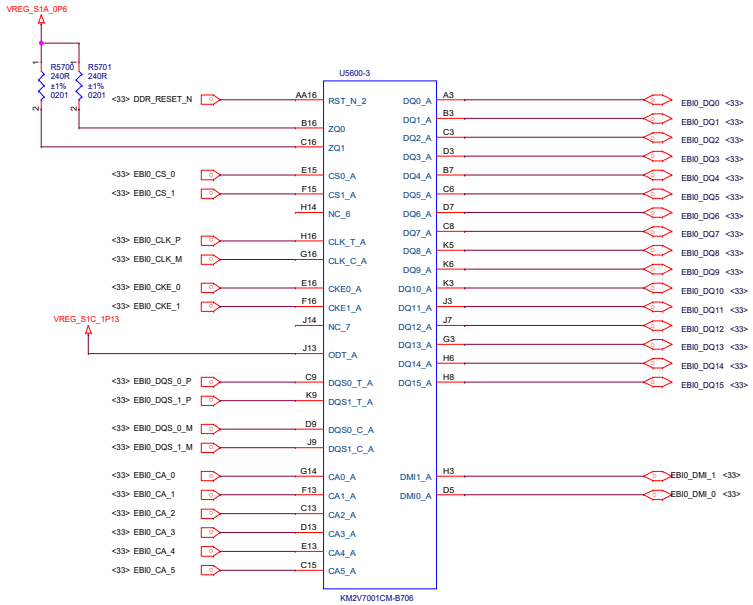

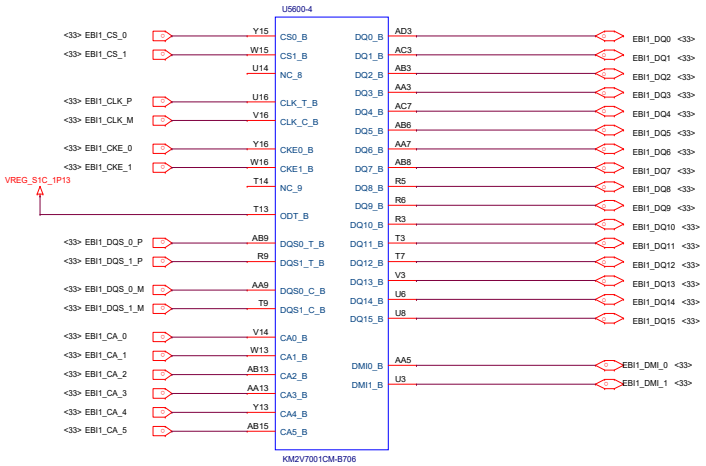

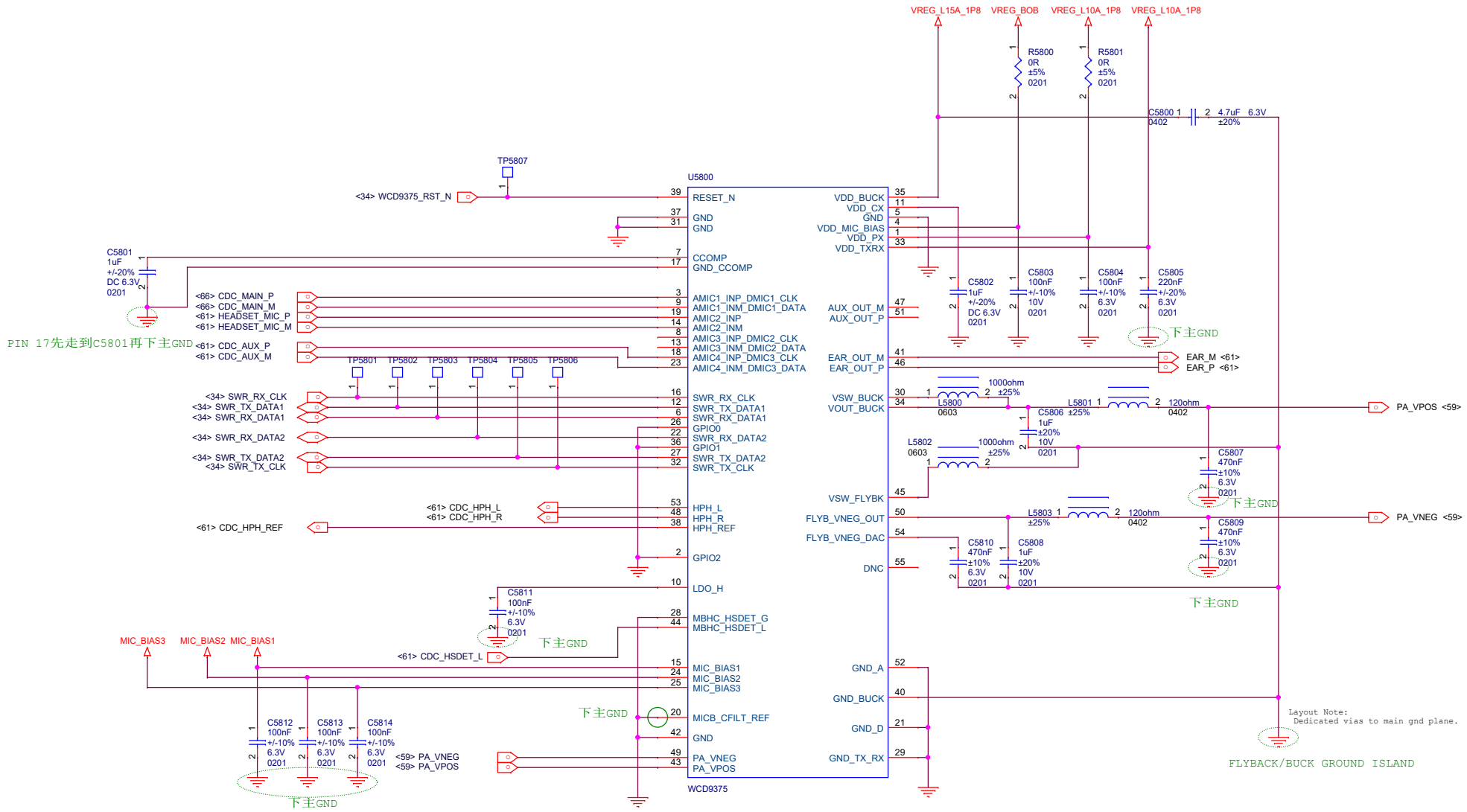
VREG_L15A_1P8
VREG_BOB
VREG_L10A_1P8
VREG_L10A_1P8
R5800 0R ±5% 0201
R5801 0R ±5% 0201
C5800 0402 4.7uF 6.3V ±20%
TP5807
U5800
<34> WCD9375_RST_N
RESET_N
GND
GND
C5801 1uF +/-20% DC 6.3V 0201
CCOMP
GND_CCOMP
<66> CDC_MAIN_P
<66> CDC_MAIN_M
<61> HEADSET_MIC_P
<61> HEADSET_MIC_M
AMIC1_INP_DMIC1_CLK
AMIC1_INM_DMIC1_DATA
AMIC2_INP
AMIC2_INM
AMIC3_INP_DMIC2_CLK
AMIC3_INM_DMIC2_DATA
AMIC4_INP_DMIC3_CLK
AMIC4_INM_DMIC3_DATA
PIN 17先走到C5801再下主GND
<61> CDC_AUX_P
<61> CDC_AUX_M
TP5801 TP5802 TP5803 TP5804 TP5805 TP5806
<34> SWR_RX_CLK
<34> SWR_TX_DATA1
<34> SWR_RX_DATA1
<34> SWR_RX_DATA2
<34> SWR_TX_DATA2
<34> SWR_TX_CLK
SWR_RX_CLK
SWR_TX_DATA1
SWR_RX_DATA1
GPIO0
SWR_RX_DATA2
GPIO1
SWR_TX_DATA2
SWR_TX_CLK
<61> CDC_HPH_L
<61> CDC_HPH_R
<61> CDC_HPH_REF
HPH_L
HPH_R
HPH_REF
GPIO2
LDO_H
C5811 100nF +/-10% 6.3V 0201
下主GND
MBHC_HSDET_G
MBHC_HSDET_L
<61> CDC_HSDET_L
MIC_BIAS3
MIC_BIAS2
MIC_BIAS1
MIC_BIAS1
MIC_BIAS2
MIC_BIAS3
下主GND
MICB_CFILT_REF
GND
C5812 100nF +/-10% 6.3V 0201
C5813 100nF +/-10% 6.3V 0201
C5814 100nF +/-10% 6.3V 0201
<59> PA_VNEG
<59> PA_VPOS
PA_VNEG
PA_VPOS
下主GND
WCD9375
VDD_BUCK
VDD_CX
GND
VDD_MIC_BIAS
VDD_PX
VDD_TXRX
C5802 1uF +/-20% DC 6.3V 0201
C5803 100nF +/-10% 10V 0201
C5804 100nF +/-10% 6.3V 0201
C5805 220nF +/-20% 6.3V 0201
下主GND
AUX_OUT_M
AUX_OUT_P
EAR_OUT_M
EAR_OUT_P
EAR_M <61>
EAR_P <61>
VSW_BUCK
VOUT_BUCK
L5800 0603 1000ohm ±25%
L5801 ±25% 120ohm 0402
PA_VPOS <59>
C5806 1uF ±20% 10V 0201
L5802 0603 1000ohm ±25%
C5807 470nF ±10% 6.3V 0201
下主GND
VSW_FLYBK
FLYB_VNEG_OUT
FLYB_VNEG_DAC
L5803 ±25% 120ohm 0402
PA_VNEG <59>
C5809 470nF ±10% 6.3V 0201
C5810 470nF ±10% 6.3V 0201
C5808 1uF ±20% 10V 0201
DNC
下主GND
GND_A
GND_BUCK
GND_D
GND_TX_RX
Layout Note:
Dedicated vias to main gnd plane.
FLYBACK/BUCK GROUND ISLAND

VA

AUX MIC

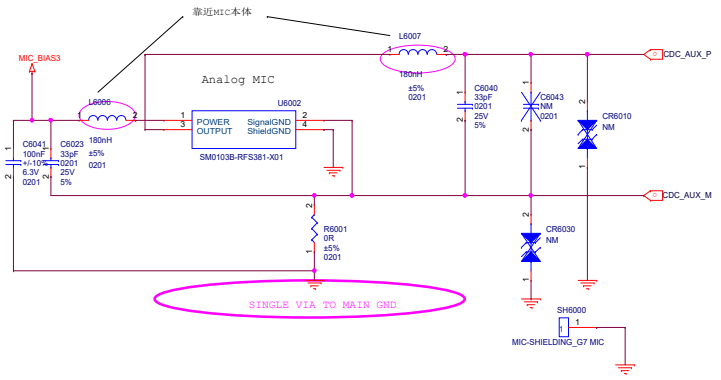

SPKR PA

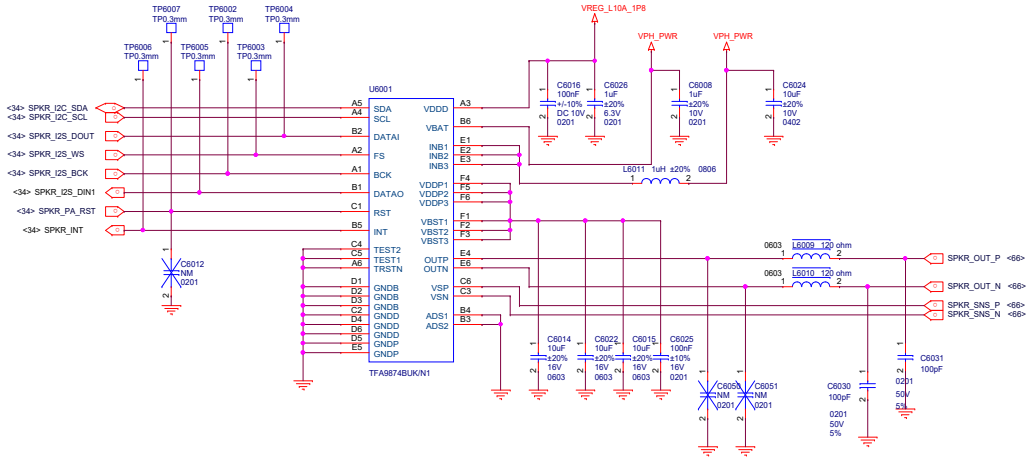

Receiver

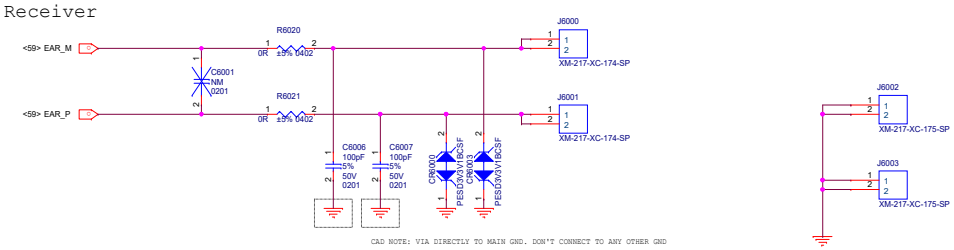

UART SWITCH

UART_LOG/LPD

器件放到笼子外

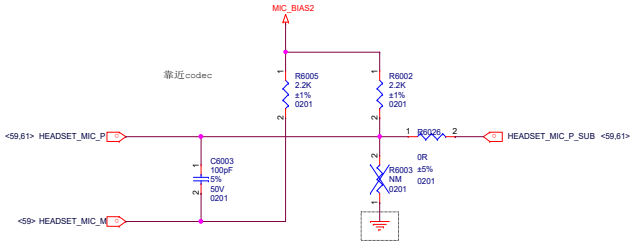

L+P-sensor

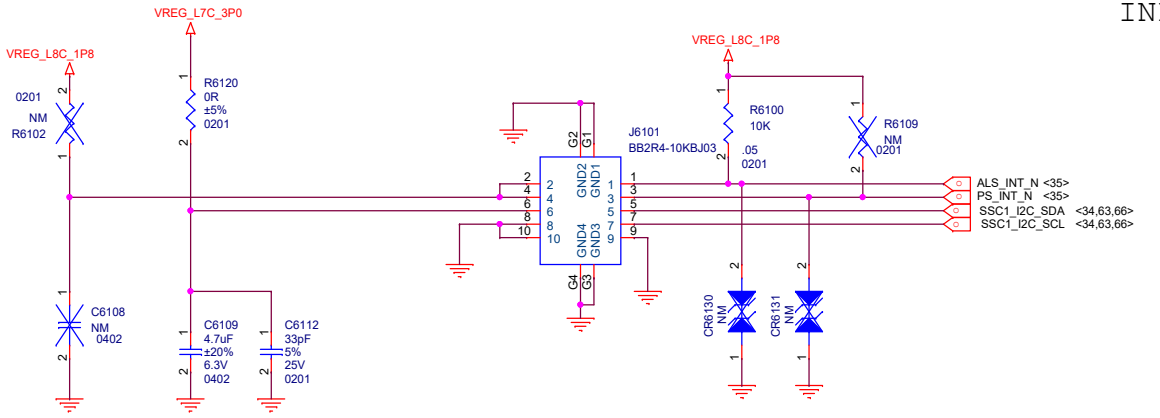

INFARED

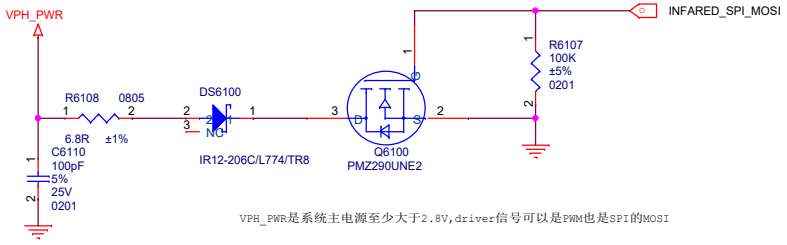

VPH_PWR是系统主电源至少大于2.8V,driver信号可以是PWM也是SPI的MOSI

A+G

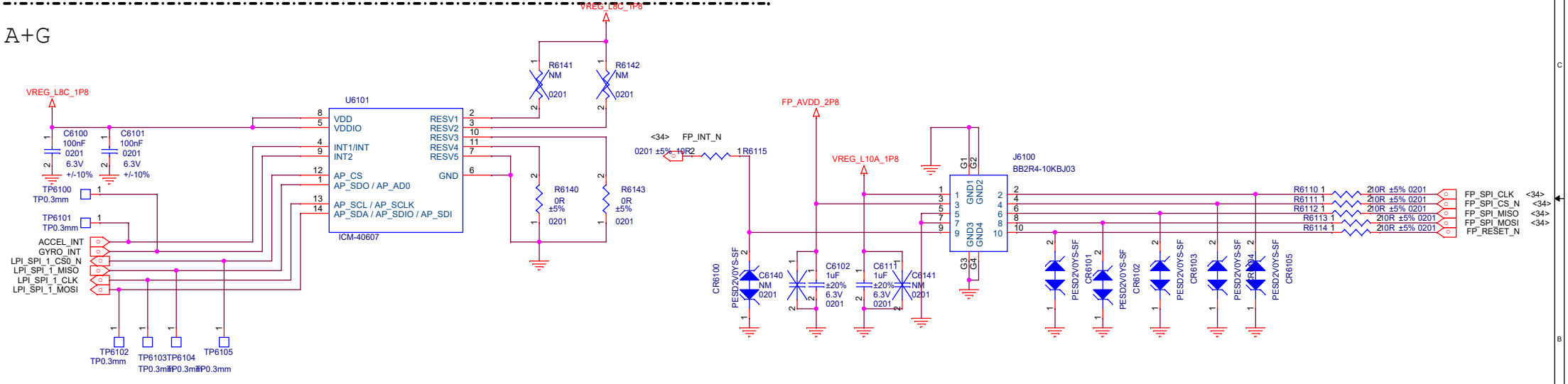

Sidekey

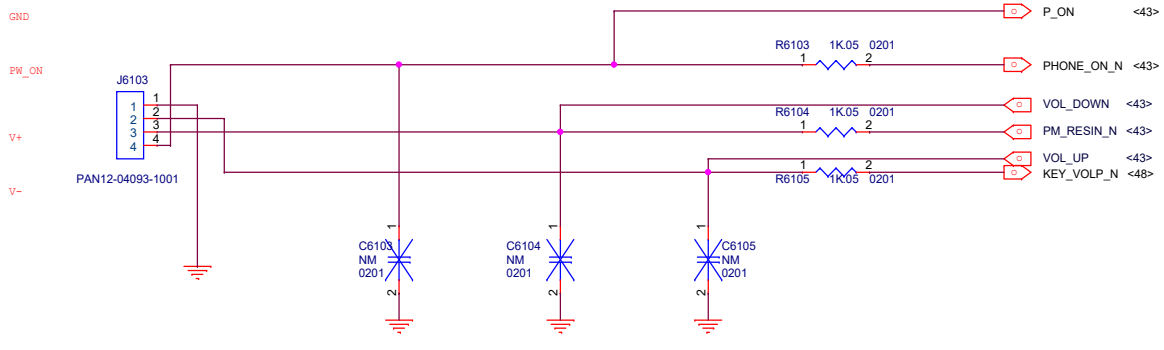

FP

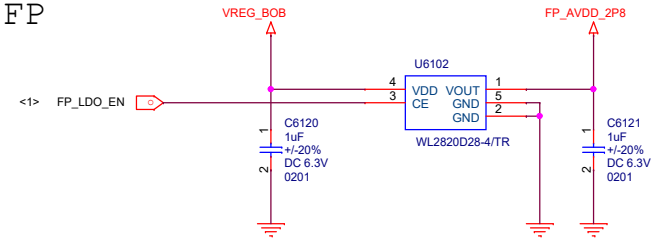

COMPASS

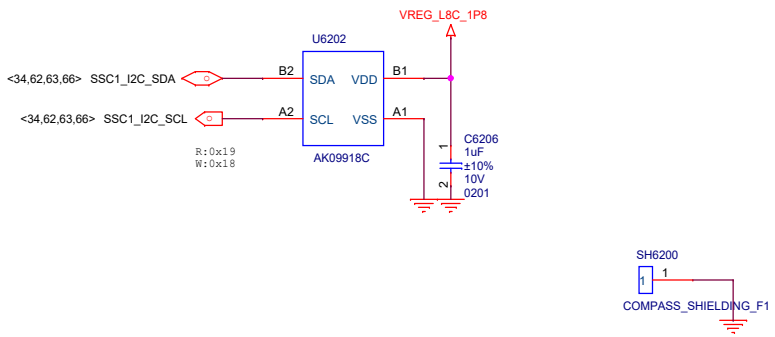
VREG_L8C_1P8
U6202
<34,62,63,66> SSC1_I2C_SDA
<34,62,63,66> SSC1_I2C_SCL
B2
A2
SDA
VDD
SCL
VSS
B1
A1
R:0x19
W:0x18
AK09918C
C6206
1uF
±10%
10V
0201
SH6200
COMPASS_SHIELDING_F1

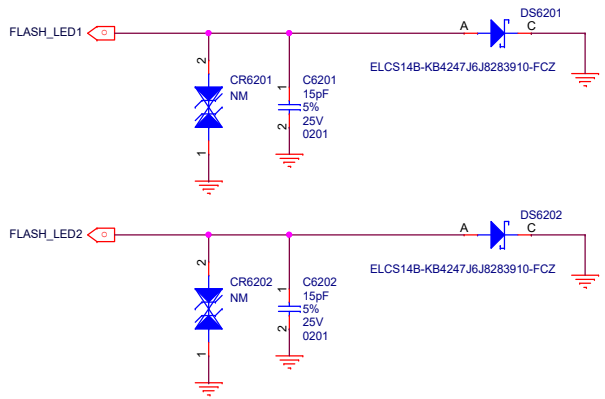
FLASH_LED1
FLASH_LED2
DS6201
DS6202
A
C
ELCS14B-KB4247J6J8283910-FCZ
CR6201
NM
C6201
15pF
5%
25V
0201
CR6202
NM
C6202
15pF
5%
25V
0201

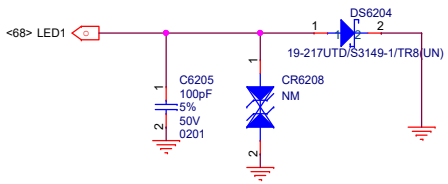
<68> LED1
DS6204
19-217UTD/S3149-1/TR8(UN)
C6205
100pF
5%
50V
0201
CR6208
NM

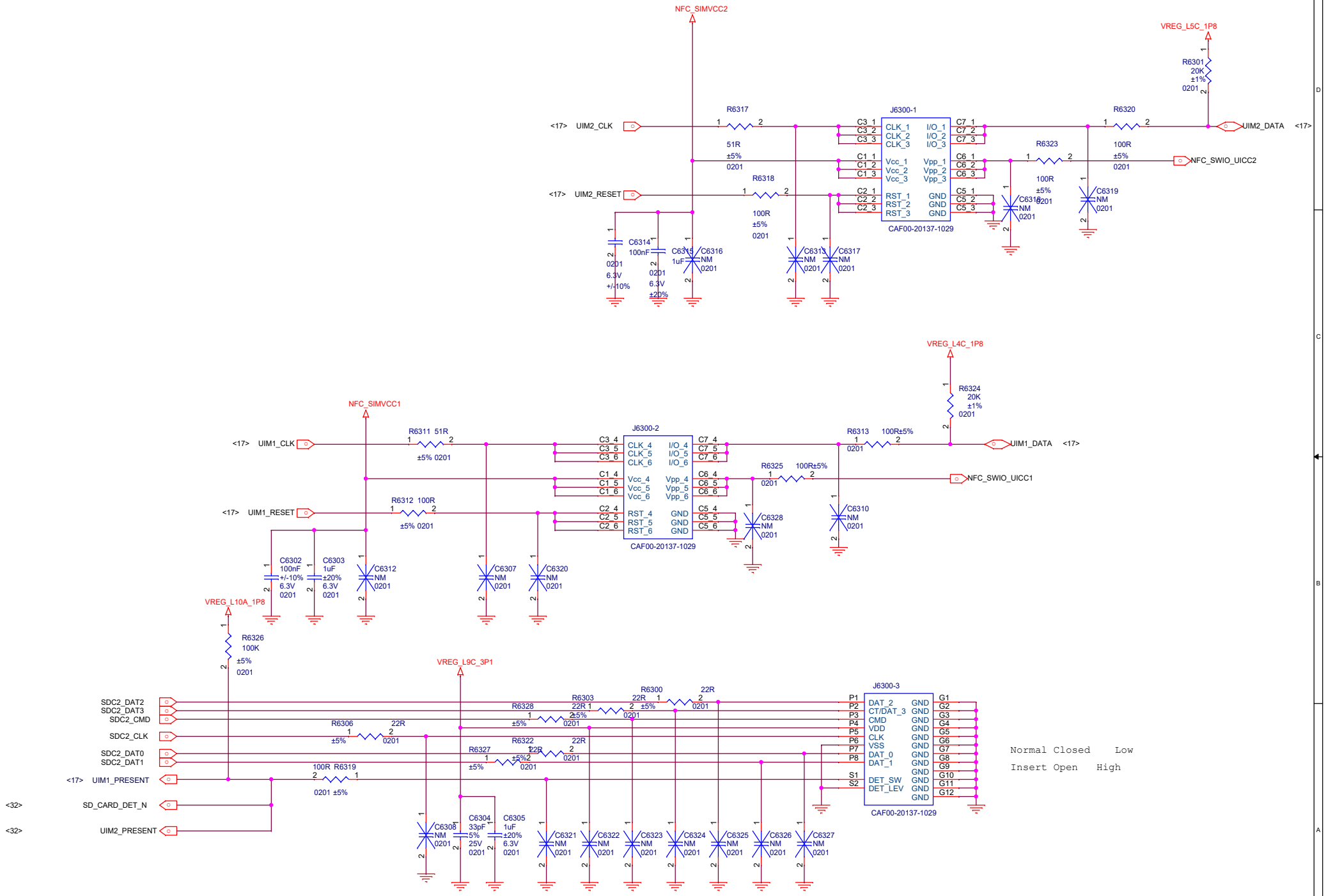
NFC_SIMVCC2
VREG_L5C_1P8
R6301 20K ±1% 0201
<17> UIM2_CLK
R6317 51R ±5% 0201
J6300-1
CLK_1 CLK_2 CLK_3 Vcc_1 Vcc_2 Vcc_3 RST_1 RST_2 RST_3
I/O_1 I/O_2 I/O_3 Vpp_1 Vpp_2 Vpp_3 GND GND GND
C3_1 C3_2 C3_3 C1_1 C1_2 C1_3 C2_1 C2_2 C2_3
C7_1 C7_2 C7_3 C6_1 C6_2 C6_3 C5_1 C5_2 C5_3
R6320 100R ±5% 0201
UIM2_DATA <17>
R6323 100R ±5% 0201
NFC_SWIO_UICC2
<17> UIM2_RESET
R6318 100R ±5% 0201
C6314 100nF 0201 6.3V +/-10%
C6315 1uF 0201 6.3V ±20%
C6316 NM 0201
C6313 NM 0201
C6317 NM 0201
C6318 NM 0201
C6319 NM 0201
CAF00-20137-1029
VREG_L4C_1P8
R6324 20K ±1% 0201
NFC_SIMVCC1
<17> UIM1_CLK
R6311 51R ±5% 0201
J6300-2
CLK_4 CLK_5 CLK_6 Vcc_4 Vcc_5 Vcc_6 RST_4 RST_5 RST_6
I/O_4 I/O_5 I/O_6 Vpp_4 Vpp_5 Vpp_6 GND GND GND
C3_4 C3_5 C3_6 C1_4 C1_5 C1_6 C2_4 C2_5 C2_6
C7_4 C7_5 C7_6 C6_4 C6_5 C6_6 C5_4 C5_5 C5_6
R6313 100R±5% 0201
UIM1_DATA <17>
R6325 100R±5% 0201
NFC_SWIO_UICC1
<17> UIM1_RESET
R6312 100R ±5% 0201
C6302 100nF +/-10% 6.3V 0201
C6303 1uF ±20% 6.3V 0201
C6312 NM 0201
C6307 NM 0201
C6320 NM 0201
C6328 NM 0201
C6310 NM 0201
CAF00-20137-1029
VREG_L10A_1P8
R6326 100K ±5% 0201
VREG_L9C_3P1
SDC2_DAT2
SDC2_DAT3
SDC2_CMD
SDC2_CLK
SDC2_DAT0
SDC2_DAT1
<17> UIM1_PRESENT
<32> SD_CARD_DET_N
<32> UIM2_PRESENT
R6328 22R ±5% 0201
R6303 22R ±5% 0201
R6300 22R ±5% 0201
R6306 22R ±5% 0201
R6322 22R ±5% 0201
R6327 22R ±5% 0201
100R R6319 0201 ±5%
J6300-3
DAT_2 CT/DAT_3 CMD VDD CLK VSS DAT_0 DAT_1 DET_SW DET_LEV
GND
P1 P2 P3 P4 P5 P6 P7 P8 S1 S2
G1 G2 G3 G4 G5 G6 G7 G8 G9 G10 G11 G12
CAF00-20137-1029
C6308 NM 0201
C6304 33pF 5% 25V 0201
C6305 1uF ±20% 6.3V 0201
C6321 NM 0201
C6322 NM 0201
C6323 NM 0201
C6324 NM 0201
C6325 NM 0201
C6326 NM 0201
C6327 NM 0201
Normal Closed Low
Insert Open High

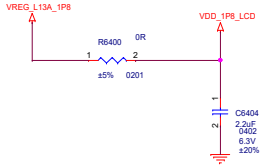
VREG_L13A_1P8
VDD_1P8_LCD
R6400
0R
±5%
0201
C6404
2.2uF
0402
6.3V
±20%

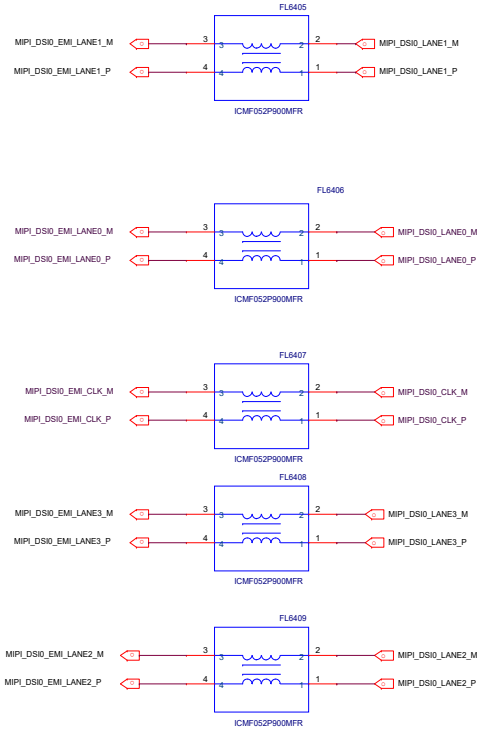
FL6405
MIPI_DSI0_EMI_LANE1_M
MIPI_DSI0_EMI_LANE1_P
MIPI_DSI0_LANE1_M
MIPI_DSI0_LANE1_P
ICMF052P900MFR
FL6406
MIPI_DSI0_EMI_LANE0_M
MIPI_DSI0_EMI_LANE0_P
MIPI_DSI0_LANE0_M
MIPI_DSI0_LANE0_P
ICMF052P900MFR
FL6407
MIPI_DSI0_EMI_CLK_M
MIPI_DSI0_EMI_CLK_P
MIPI_DSI0_CLK_M
MIPI_DSI0_CLK_P
ICMF052P900MFR
FL6408
MIPI_DSI0_EMI_LANE3_M
MIPI_DSI0_EMI_LANE3_P
MIPI_DSI0_LANE3_M
MIPI_DSI0_LANE3_P
ICMF052P900MFR
FL6409
MIPI_DSI0_EMI_LANE2_M
MIPI_DSI0_EMI_LANE2_P
MIPI_DSI0_LANE2_M
MIPI_DSI0_LANE2_P
ICMF052P900MFR

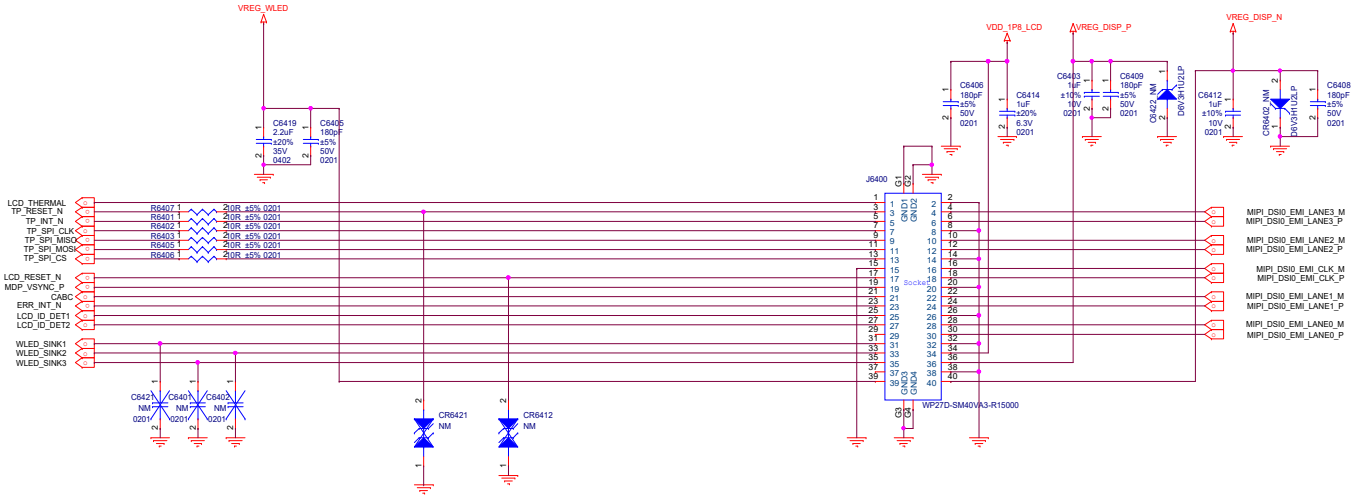
VREG_WLED
C6419
2.2uF
±20%
35V
0402
C6405
180pF
±5%
50V
0201
LCD_THERMAL
TP_RESET_N
TP_INT_N
TP_SPI_CLK
TP_SPI_MISO
TP_SPI_MOSI
TP_SPI_CS
R6407 20R ±5% 0201
R6401 20R ±5% 0201
R6402 20R ±5% 0201
R6403 20R ±5% 0201
R6405 20R ±5% 0201
R6406 20R ±5% 0201
LCD_RESET_N
MDP_VSYNC_P
CABC
ERR_INT_N
LCD_ID_DET1
LCD_ID_DET2
WLED_SINK1
WLED_SINK2
WLED_SINK3
C6421
NM
0201
C6401
NM
0201
C6402
NM
0201
CR6421
NM
CR6412
NM
J6400
Socket
WP27D-SM40VA3-R15000
VDD_1P8_LCD
C6406
180pF
±5%
50V
0201
C6414
1uF
±20%
6.3V
0201
VREG_DISP_P
C6403
1uF
±10%
10V
0201
C6409
180pF
±5%
50V
0201
CR6402_NM
D0603H1DZLP
VREG_DISP_N
C6412
1uF
±10%
10V
0201
CR6403_NM
D0603H1DZLP
C6408
180pF
±5%
50V
0201
MIPI_DSI0_EMI_LANE3_M
MIPI_DSI0_EMI_LANE3_P
MIPI_DSI0_EMI_LANE2_M
MIPI_DSI0_EMI_LANE2_P
MIPI_DSI0_EMI_CLK_M
MIPI_DSI0_EMI_CLK_P
MIPI_DSI0_EMI_LANE1_M
MIPI_DSI0_EMI_LANE1_P
MIPI_DSI0_EMI_LANE0_M
MIPI_DSI0_EMI_LANE0_P

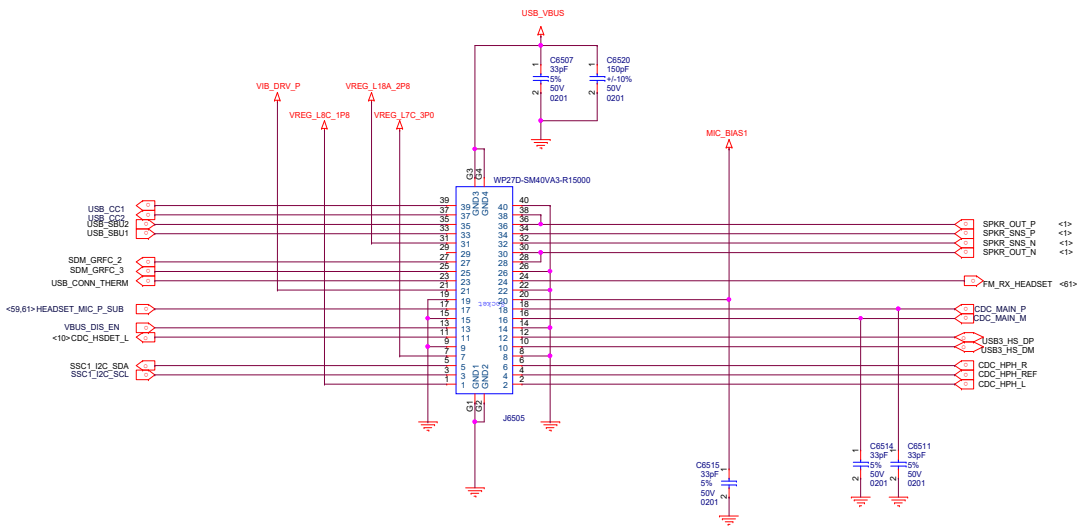
USB_VBUS
C6507
33pF
5%
50V
0201
C6520
150pF
+/-10%
50V
0201
VIB_DRV_P
VREG_L18A_2P8
VREG_L8C_1P8
VREG_L7C_3P0
MIC_BIAS1
WP27D-SM40VA3-R15000
USB_CC1
USB_CC2
USB_SBU2
USB_SBU1
SDM_GRFC_2
SDM_GRFC_3
USB_CONN_THERM
<59,61> HEADSET_MIC_P_SUB
VBUS_DIS_EN
<10> CDC_HSDET_L
SSC1_I2C_SDA
SSC1_I2C_SCL
SPKR_OUT_P <1>
SPKR_SNS_P <1>
SPKR_SNS_N <1>
SPKR_OUT_N <1>
FM_RX_HEADSET <61>
CDC_MAIN_P
CDC_MAIN_M
USB3_HS_DP
USB3_HS_DM
CDC_HPH_R
CDC_HPH_REF
CDC_HPH_L
J6505
C6515
33pF
5%
50V
0201
C6514
33pF
5%
50V
0201
C6511
33pF
5%
50V
0201

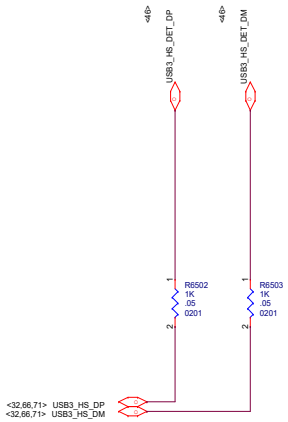
<46> USB3_HS_DET_DP
<46> USB3_HS_DET_DM
R6502
1K
.05
0201
R6503
1K
.05
0201
<32,66,71> USB3_HS_DP
<32,66,71> USB3_HS_DM

2M DEEP

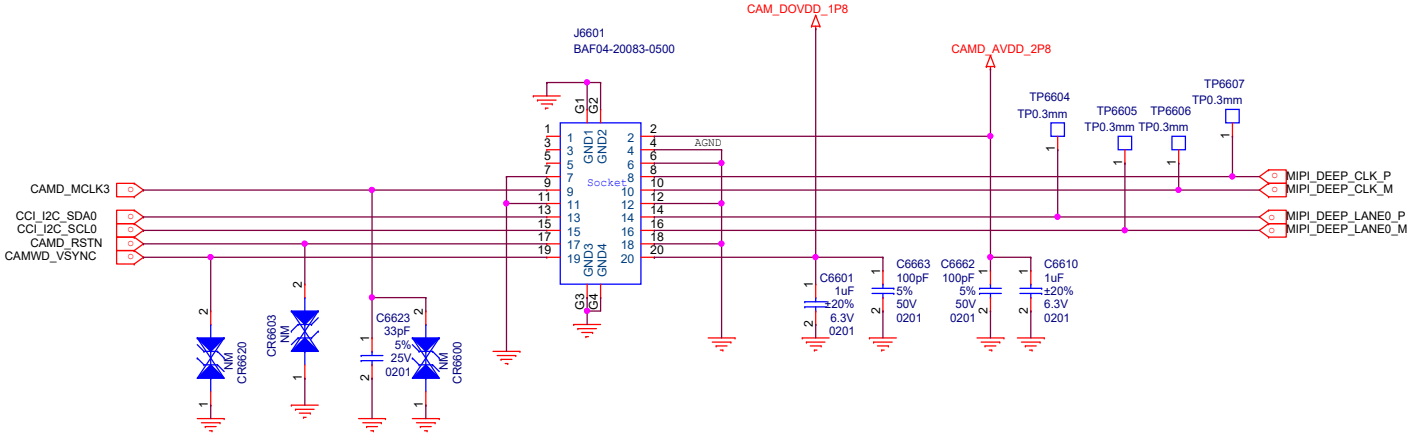

2M MICRO

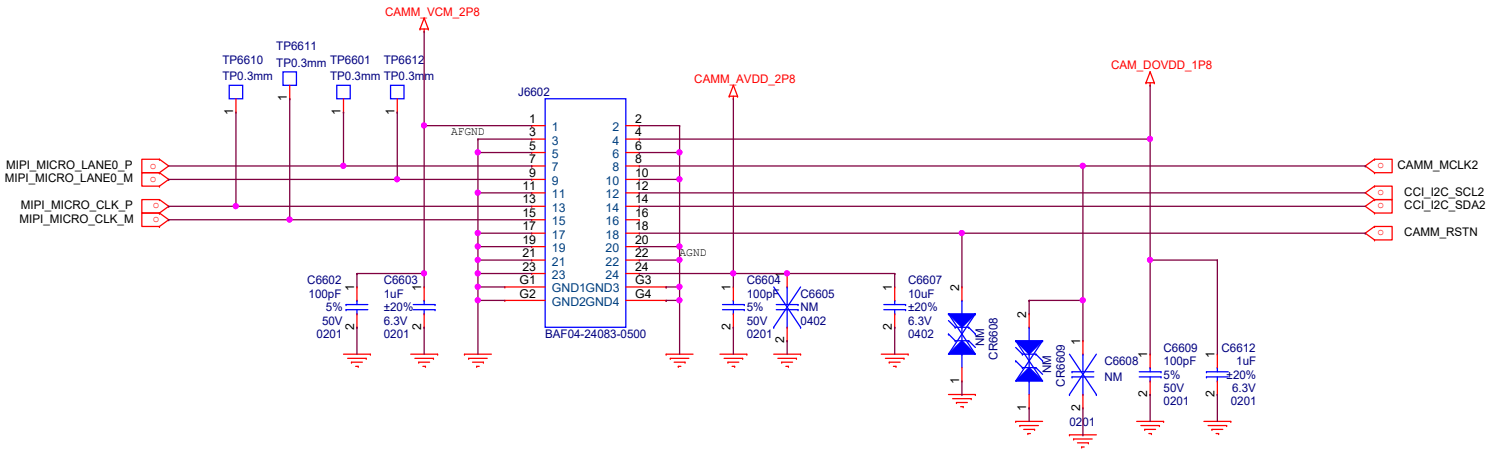

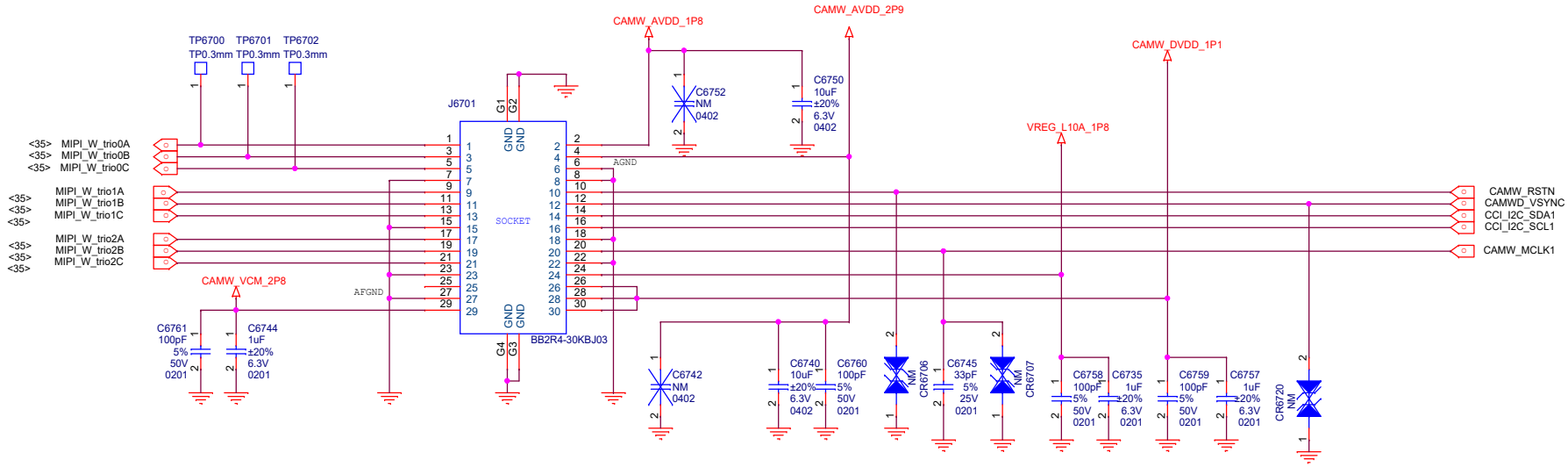
TP6700 TP0.3mm
TP6701 TP0.3mm
TP6702 TP0.3mm
J6701
SOCKET
BB2R4-30KBJ03
GND
G1
G2
G3
G4
<35> MIPI_W_trio0A
<35> MIPI_W_trio0B
<35> MIPI_W_trio0C
<35> MIPI_W_trio1A
<35> MIPI_W_trio1B
<35> MIPI_W_trio1C
<35> MIPI_W_trio2A
<35> MIPI_W_trio2B
<35> MIPI_W_trio2C
AGND
AFGND
CAMW_VCM_2P8
C6761 100pF 5% 50V 0201
C6744 1uF ±20% 6.3V 0201
CAMW_AVDD_1P8
C6752 NM 0402
CAMW_AVDD_2P9
C6750 10uF ±20% 6.3V 0402
C6742 NM 0402
C6740 10uF ±20% 6.3V 0402
C6760 100pF 5% 50V 0201
CR6706 NM
C6745 33pF 5% 25V 0201
CR6707 NM
VREG_L10A_1P8
C6758 100pF 5% 50V 0201
C6735 1uF ±20% 6.3V 0201
CAMW_DVDD_1P1
C6759 100pF 5% 50V 0201
C6757 1uF ±20% 6.3V 0201
CR6720 NM
CAMW_RSTN
CAMWD_VSYNC
CCI_I2C_SDA1
CCI_I2C_SCL1
CAMW_MCLK1

20M FRONT

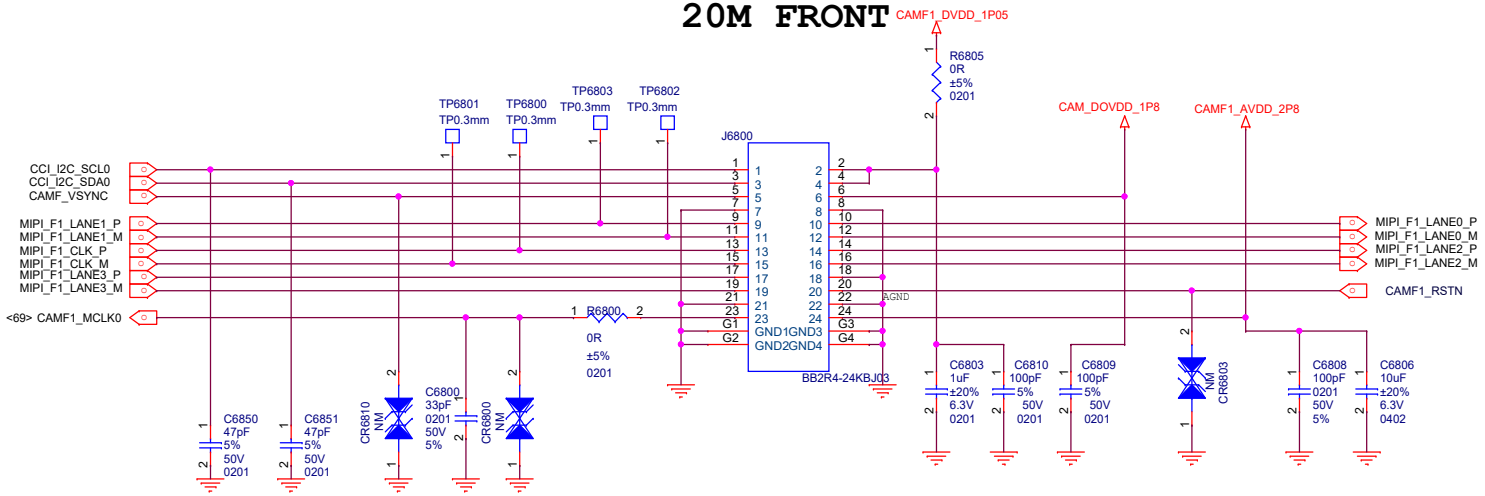

2M FRONT

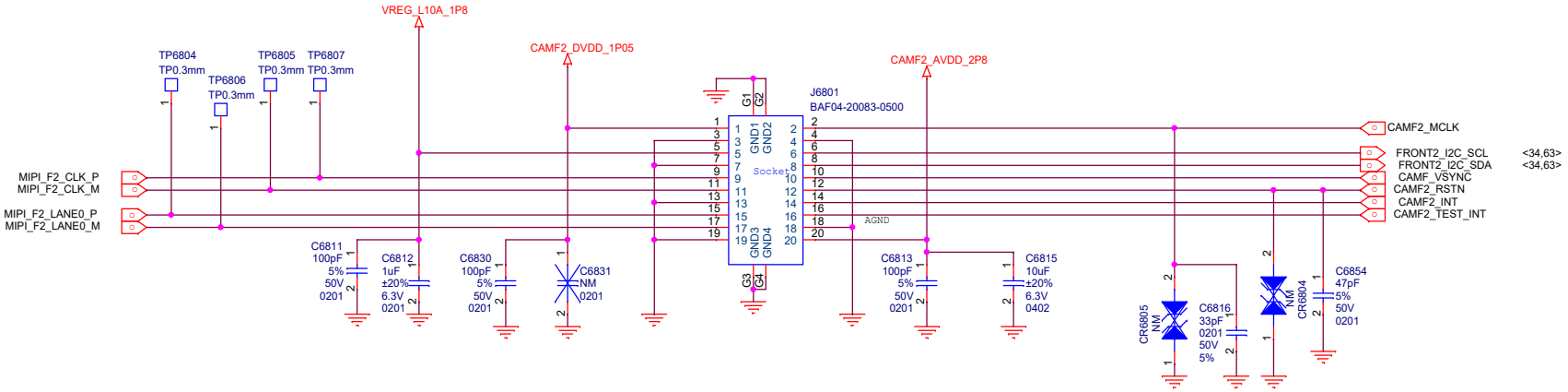

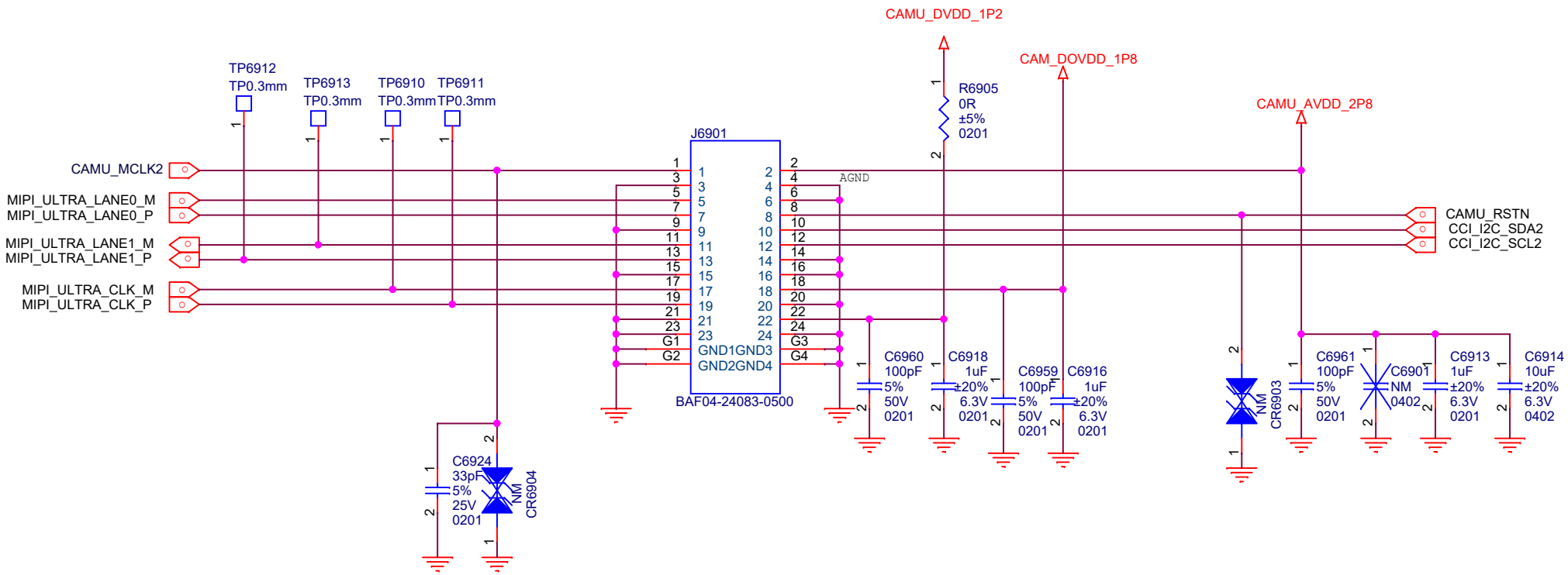
CAMU_DVDD_1P2
CAM_DOVDD_1P8
CAMU_AVDD_2P8
TP6912
TP0.3mm
TP6913
TP0.3mm
TP6910
TP0.3mm
TP6911
TP0.3mm
R6905
0R
±5%
0201
J6901
CAMU_MCLK2
MIPI_ULTRA_LANE0_M
MIPI_ULTRA_LANE0_P
MIPI_ULTRA_LANE1_M
MIPI_ULTRA_LANE1_P
MIPI_ULTRA_CLK_M
MIPI_ULTRA_CLK_P
AGND
CAMU_RSTN
CCI_I2C_SDA2
CCI_I2C_SCL2
GND1GND3
GND2GND4
BAF04-24083-0500
C6960
100pF
5%
50V
0201
C6918
1uF
±20%
6.3V
0201
C6959
100pF
5%
50V
0201
C6916
1uF
±20%
6.3V
0201
NM
CR6903
C6961
100pF
5%
50V
0201
C6901
NM
0402
C6913
1uF
±20%
6.3V
0201
C6914
10uF
±20%
6.3V
0402
C6924
33pF
5%
25V
0201
NM
CR6904

WIDE

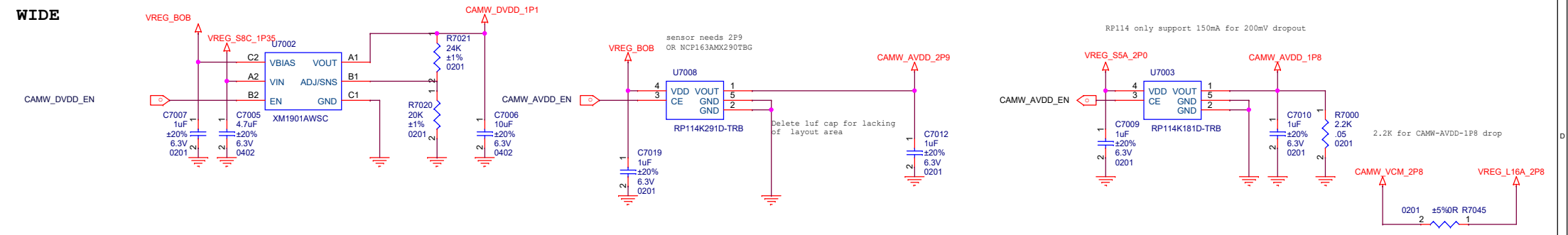

DEEP

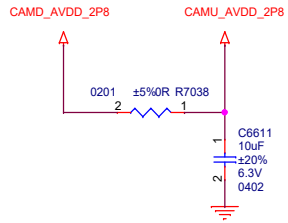

MICRO

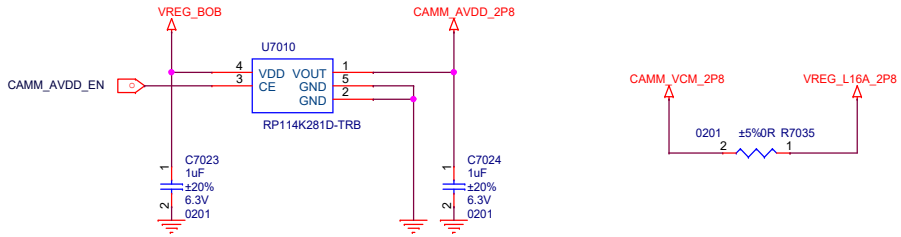

FRONT

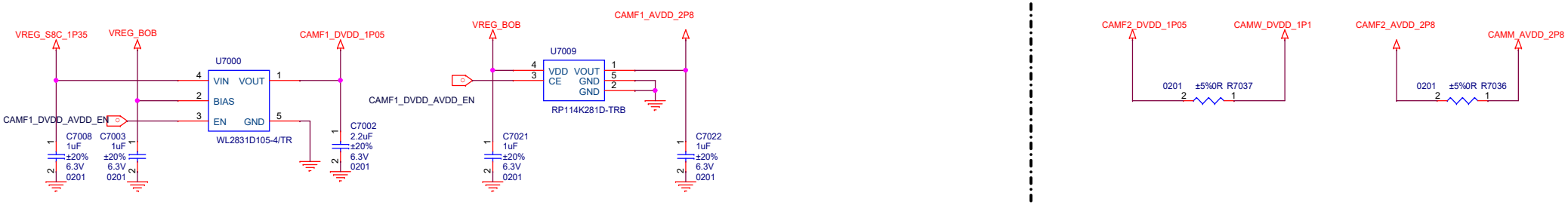

ULTRA

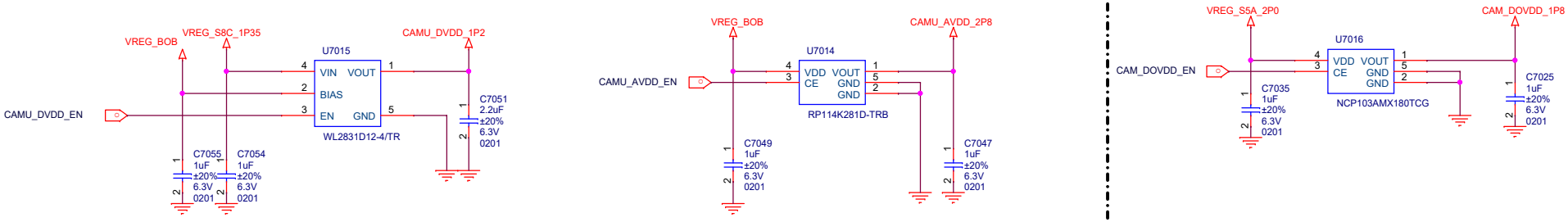

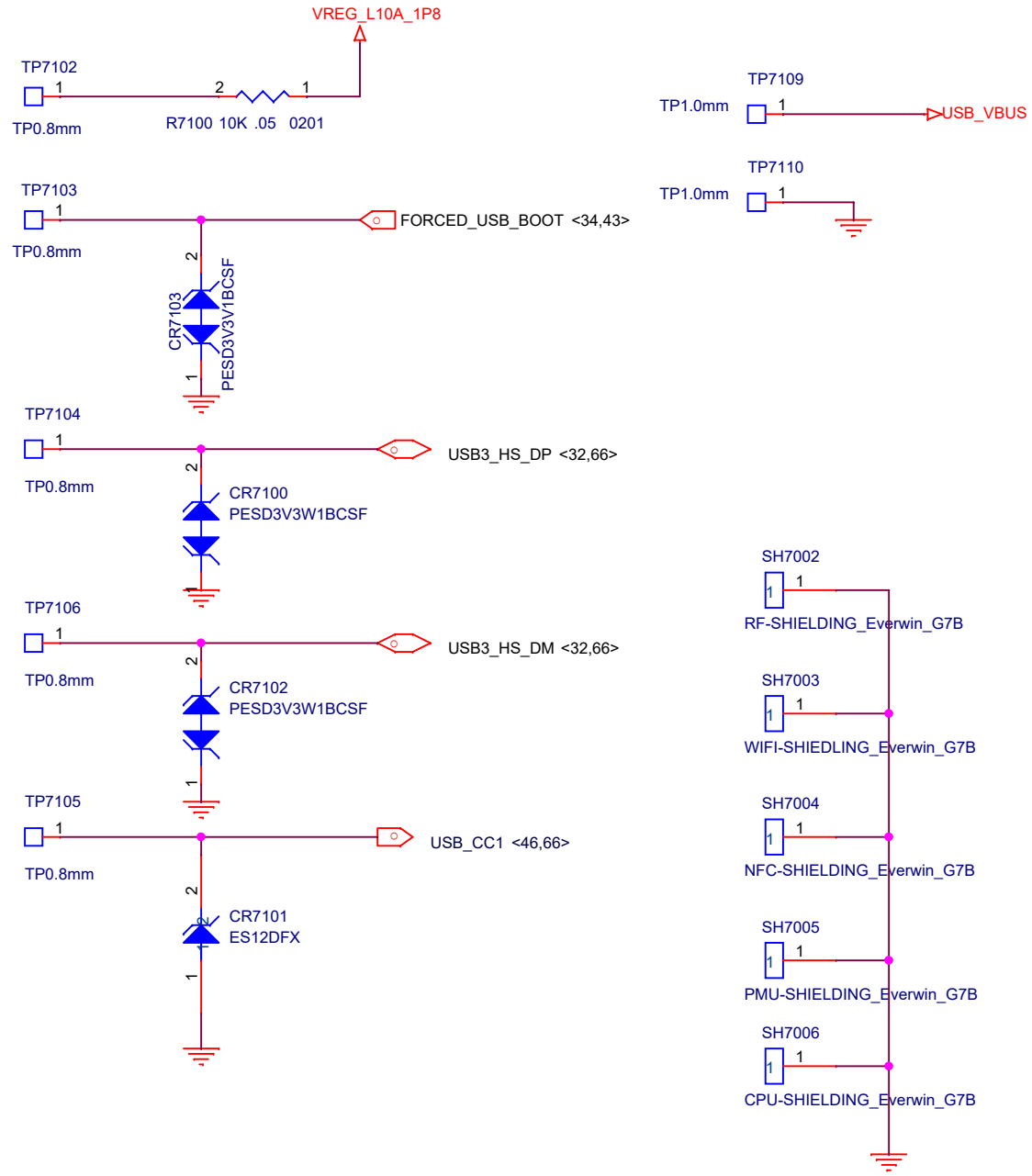
VREG_L10A_1P8
TP7102
TP0.8mm
R7100 10K .05 0201
TP7109
TP1.0mm
USB_VBUS
TP7110
TP1.0mm
TP7103
TP0.8mm
FORCED_USB_BOOT <34,43>
CR7103
PESD3V3V1BCSF
TP7104
TP0.8mm
USB3_HS_DP <32,66>
CR7100
PESD3V3W1BCSF
TP7106
TP0.8mm
USB3_HS_DM <32,66>
CR7102
PESD3V3W1BCSF
TP7105
TP0.8mm
USB_CC1 <46,66>
CR7101
ES12DFX
SH7002
RF-SHIELDING_Everwin_G7B
SH7003
WIFI-SHIEDLING_Everwin_G7B
SH7004
NFC-SHIELDING_Everwin_G7B
SH7005
PMU-SHIELDING_Everwin_G7B
SH7006
CPU-SHIELDING_Everwin_G7B